LOOP-AM
MODEL 3440
Wideband Access DCS-MUX
USER'S MANUAL

LOOP TELECOMMUNICATION INTERNATIONAL, INC.
8F, NO. 8, HSIN ANN RD.
SCIENCE-BASED INDUSTRIAL PARK
HSINCHU, TAIWAN
Tel: +886-3-578-7696
Fax: +886-3-578-7695

© 2012 Loop Telecommunication International, Inc. All rights reserved.
Version 84 2 MAR 2012

CAUTION:

- **Only qualified service personnel shall install and maintain the system.**
- **This equipment must be connected to an earth socket-outlet, which has a permanent connection to protective earth with a cross-sectional area of not less than 2.5 mm^2.**
- **Ensure protective earthing connected before install /uninstall telephone wires.**
- **Never install telephone wiring during a lightning storm.**
- **Never install telephone jacks in wet locations unless the jack is specifically designed for wet locations.**
- **Never touch uninsulated telephone wires or terminals unless the telephone line has been disconnected at the network interface.**
- **Use caution when installing or modifying telephone lines.**

Précautions :

- **Seul le personnel qualifié peut installer et entretenir le matériel.**
- **L’équipement doit être connecté à la prise de terre, qui doit avoir une connexion permanente à la terre de protection avec une section de fil supérieure à 2.5 mm2.**
- **S’assurer que la terre de protection est branché lors de l’installation ou désinstallation des fils téléphoniques.**
- **Ne jamais installer les fils du téléphone pendant un orage.**
- **Ne jamais installer la prise téléphonique dans un endroit humide sans prendre la précaution que cette prise téléphonique soit prévu pour un environnement humide.**
- **Ne jamais toucher les fils téléphoniques dénudés sans que la prise téléphonique soit débranché du réseau.**
- **Prendre toutes les précautions d'usages pendant l'installation ou les modifications de la ligne téléphonique.**

Note: AM3440 User's Manual is available in different volumes

Main Chassis (LOOP AM3440 Wideband Access DCS-MUX USER'S MANUAL)
LCD Manual (only cover selected plug-in module)
1DTE Manual
1FOM Manual
1FOMA Manual
3E1 Manual
4E1T1 Manual
4E&M Manual
4FXSFXO Manual
8E&M Manual
8RS232 Manual
Conference Manual
Co-directional (G.703) Manual
Data Bridge Manual
Dry Contact/Dry Contact-B Manual
E1T1 Manual
FOM Manual
G.703 (Co-direction) Manual
G.SHDSL Manual
Low Speed Optical (C37.94) Manual
Magneto Manual
OCU-DP Manual
Router Manual
Router-A Manual
Router-B Manual
Single E1/T1 Manual
TDMoE Card
Terminal Server Manual
12/24-FXSFXO Manual
U-interface Manual (Discontinued)

Please refer to the Manual that meet your specific needs.

TABLE OF CONTENTS

1 Product Description 1
1.1 Function Description 1
1.2 Physical Description 1
1.3 Application 2
1.4 Specifications for AM3440 3
2 Installation 15
2.1 Site Selection 15
2.2 Mechanical Installation 15
2.3 Electrical Installation 15
2.3.1 Chassis Grounding 16
2.3.2 Electrical Installation Guide 17
2.3.3 Fan Tray Setting 20
2.3.4 Alarm Relay 22
2.3.5 Fuse Relay 23
2.3.6 Jumper Location for Mini Quad E1 card 23
2.3.7 Line Power Option 24
2.4 Configuration Setting 24
2.4.1 Software Configuration Setting 24
2.4.2 Replacement of Plug-in card 24
3 Operation 31
3.1 Quick Start for Loop-AM 31
3.1.1 Power On 31
3.1.2 Load Default 31
3.1.3 Using Front Panel 31
3.1.3.1. Review of Default Settings 31
3.1.3.2. Map Setup 31
3.1.3.3. DS1 32
3.1.3.4. Unit Selection 32
3.1.4 Using Terminal 32
3.1.5 Configuration Settings 32
3.2 System Operation 33
3.2.1 Date 33
3.2.2 Master Clock 33
3.2.3 Console Port 33
3.2.4 Menu Lock 33
3.2.5 Logon, Logoff, and Password 34
3.3 Alarms and Reports 34
3.3.1 Alarms 34
3.3.2 Reports 37
3.4 LED Operation 39
3.5 Telnet Connectivity 40
3.6 Embedded SNMP Agent 40
3.7 In-Band Management Setup 41
4 Maintenance 43
4.1 Self-Test 43
4.2 Diagnostics 43
4.3 Near End Loopback 43
4.4 Far End Loopback 43
4.5 Test Pattern 43
4.6 Verifying Loop-AM Operations 43
4.6.1 Quick Test 44
4.6.1.1. LCD/Display 44
4.6.1.2. Independent Test 44
4.6.2 Substitution 44
4.6.3 Using Loopback Plugs 44
4.6.4 Using Bert Test Set 44
5 Front Panel Operation 45

5.1 Refer to AM3440-A LCD separate Manual 45
6 Terminal Operation 46
6.1 Menu Tree 47
6.2 Main Menu 48
6.2.1 Controller Configuration 48
6.2.1.1. System 49
6.2.1.2. Clock Source 49
6.2.1.3. TSI Map 51
6.2.1.4. Current TSI Map 52
6.2.1.5. Power/Fan Status 53
6.2.1.6. Link backup function 54
6.2.1.7. QDS1 1:1 protection 54
6.2.1.8. DS0-SNCP Status 55
6.2.2 Clock Source Configuration 55
6.2.3 Alarm Queue Summary 55
6.2.4 Information Summary 56
6.2.5 Redundant CTRL Information 56
6.2.6 Performance Report 57
6.2.7 System Setup 59
6.2.7.1. System 59
6.2.7.2. SNMP 62
6.2.7.3. Password 68
6.2.7.4. TSI Map Setup 68
6.2.7.5. Select a New TSI Map 69
6.2.7.6. Copy a TSI Map to another 69
6.2.7.7. Clear a TSI Map 70
6.2.7.8. Command Line 70
6.2.7.9. Init New Card 71
6.2.7.10. Clear Empty Slot 72
6.2.7.11. Link back up 73
6.2.7.12. QDS1 1:1 Protection 73
6.2.7.13. DS0-SNCP Setup 73
6.2.7.14. PDH Ring Protection 74
6.2.7.15. PDH Ring Diagnostic 75
6.2.7.16. SNTP Setup 75
6.2.7.17. TELNET/SSH Setup 76
6.2.7.18. Power Setup 77
6.2.7.19. Multicast Mapping Procedure 77
6.2.8 System Alarm Setup 83
6.2.9 Firmware Transfer 84
6.2.9.1. Download Mainboard Firmware 85
6.2.9.2. Application of upload / download configuration 86
6.2.9.3. Copy Firmware to Redundant 87
6.2.10 Store/ Retrieve Configuration 93
6.2.11 Clock Source Setup 95
6.2.12 Bit Error Rate Test 101
6.2.13 Alarm Cut Off 102
6.2.14 Clear Alarm Queue 102
6.2.15 Return to Default 102
6.2.16 Controller Reset 102
6.3 DTE (V.35) Sub-Menu 103
6.3.1 DTE Configuration 103
6.3.2 DTE Status 105
6.3.3 Alarm History 105
6.3.4 System Setup 106
6.3.5 Loopback Test 106
6.3.6 Alarm Setup 107
6.3.7 Upgrade Firmware 107
6.3.8 Clear Current Port Performance Data 108
6.3.9 Return to Default 108
6.3.10 Reset Current DTE Board 108

6.4 ATM Frame Relay Sub-Menu 109
6.4.1 1-Hour Performance Report 109
6.4.1.1. ATM Frame Relay - T1 109
6.4.1.2. ATM Frame Relay - E1 111
6.4.2 24-Hour Performance Report 112
6.4.2.1. ATM Frame Relay – T1 112
6.4.2.2. ATM Frame Relay – E1 113
6.4.3 Port Statistics 114
6.4.3.1. T1/E1 Line Availability 114
6.4.3.2. Frame Relay Statistics 115
6.4.3.3. ATM Statistics 116
6.4.4 Unit Configuration 116
6.4.4.1. System Setup – ATM/ FR T1 116
6.4.4.2. System Setup – ATM/ FR E1 117
6.4.5 Alarm History 117
6.4.5.1. Alarm History - FR to ATM 117
6.4.5.2. Alarm History - FR to FR 118
6.4.6 Port Status 118
6.4.6.1. T1/ E1 Status 118
6.4.6.2. Frame Relay Status 119
6.4.6.3. ATM Status 120
6.4.7 Alarm Queue 121
6.4.8 Loopback Test 121
6.4.8.1. ATM Frame Relay – T1 121
6.4.8.2. ATM Frame Relay – E1 122
6.4.9 Alarm Setup 122
6.4.9.1. Alarm Setup - FR to ATM 122
6.4.9.2. Alarm Setup - FR to FR 123
6.4.10 AM 3440 TSI MAP Setup 123
6.4.10.1. Map slot D (ATM/FR) to slot B (E1 card) 123
6.4.10.2. Map slot D (ATM/FR) to slot 6 (V.35 card) 124
6.4.10.3. Map slot D (ATM/FR) to slot 1 (V.35 card) 124
6.4.10.4. Map slot D (ATM/FR) to HDLC (Inband Channel) 125
6.4.11 System Setup 125
6.4.11.1. ATM/ FR card Configuration 125
6.4.11.2. System Specific to ATM Protocol 126
6.4.11.3. Setup Specific to FR-FR Protocol 130
6.4.12 Clear Alarm Queue and History 133
6.4.13 Clear Performance Data 134
6.4.14 Upgrade Firmware 134
6.4.15 Unit Load Default Configuration 135
6.4.16 Unit Reset 135
6.5 Mini Quad E1 Sub-Menu 136
6.5.1 Unit 1-Hour Performance Report 137
6.5.2 Unit 24-Hour Performance Report 138
6.5.3 Unit Line Availability 139
6.5.4 Unit Configuration 139
6.5.5 Unit Status 140
6.5.6 Unit Alarm History 140
6.5.7 Unit Alarm Queue 141
6.5.8 Unit Loopback Setup 141
6.5.9 Unit System Setup 142
6.5.10 Unit Clear Performance Data 142
6.5.11 Unit Alarm Setup 143
6.5.12 Unit Clear Alarm Queue & History 143
6.5.13 Unit Upgrade Firmware 144
6.5.14 Unit Load Default Configuration 144
6.5.15 Unit Reset 145
7 Appendix A – Link Backup Function 146
7.1 Introduction 146
7.2 Physical Requirement 147

7.3 Setup Procedure 147
8 Appendix B – Inband Management 149
8.1 Introduction 149
8.2 Inband Management Setup Procedure 150
9 Appendix C –QDS1 1:1 Protection 154
9.1 Introduction 154
9.2 Setting up Circuit Protection 154
9.2.1 Connecting the Y-Box to the AM 3440 Shelf 154
9.2.2 Quad E1 card Location 156
9.2.3 Setting up a VT-100 Monitor 156
9.2.4 Step by Step Quad E1 Plug-in card Circuit Protection Setup 156
9.3 Setting up Line Protection 157
9.3.1 Step by Step Quad E1 Card Line Protection Setup 158
10 Appendix D: Loop AM-3440-A Alarm Trap Information 161
10.1 Trap definition 161
10.2 ccAlarmModel: Plug-in card model type 162
10.3 ccAlarmSlot: Slot index 163
10.4 ccAlarmPort: Port index 163
10.5 ccAlarmType < 20: Controller alarm 163
10.6 ccAlarmType: Unit alarm 164
10.7 *Alarm Setup Indication* 169
11 Appendix E: Setting up an AM3440-A PDH Shared Protection Ring 170
11.1 Overview 170
11.2 Setup Instructions 171
12 Appendix F: Setting up an AM3440-A PDH Shared Protection Ring (T1) 176
12.1 Overview 176
12.2 Setup Instructions 177
13 3E1 DS0-SNCP Setup 182
13.1 Physical Requirement 182
13.2 Setup Procedures 184
14 Appendix G: AM3440-A Power Consumption 205

LIST OF FIGURES

Figure 1-1 Loop-AM 3440 Application Illustration (1 of 2) 2
Figure 1-2 Loop-AM 3440 with Y-BOX (2 of 2) 2
Figure 2-1 Ground Screw Location 16
Figure 2-2 DC Power Without Grounding Application 17
Figure 2-3 Panel Views - Main Shelf and CPU 18
Figure 2-4 Panel Views (for 1/2 slot) - Power Modules 19
Figure 2-5 Front Panel View - Fan Tray 20
Figure 2-6 Rear Panel View - Fan Tray 20
Figure 2-7 Top View - Fan Tray 21
Figure 2-8 Jumper Location for Mini Quad E1 Interface 23
Figure 3-1 HDLC using E1 router 41
Figure 6-1 AM3440 Controller: Menu Tree 47
Figure 8-1 Inband Management Diagram 149
Figure 9-1 Connection for AM3440 and Y-BOX with BNC connectors 155
Figure 9-2 Connection for AM3440 and Y-BOX with RJ48C connectors 155
Figure 9-3 Line Protection for Quad E1 Card 157
Figure 13-1 Sample Application for 3E1 DS0-SNCP Setup 183
Figure 13-2 Application for BERT and Loopback Diagnosis 201

LIST OF TABLES

Table 2-1 Power Connector for Fan Tray 21
Table 2-2 Power Connector for Main Unit 21
Table 2-3 Console Port 21
Table 2-4 Ethernet Port 22
Table 2-5 Alarm Relay Circuit Contact State When Alarm Setup is Enable 22
Table 2-6 Alarm Relay Circuit Contact State When Alarm Setup is Disable 22
Table 2-7 FUSE Relay Connector 23
Table 2-8 Circuit protection for Mini Quad E1 Interface 24
Table 2-9 V.35/DB25 DTE Port Pin Definition 25
Table 2-10 V.36/ EIA530/ DB25 DTE Port Pin Definition 26
Table 2-11 X.21/V.11 and DB15 DTE Port Pin Definition 26
Table 2-12 RS232/DB25 DTE Port Pin Definition 27
Table 2-13 DB25 Mini Quad E1 Pin Definition 28
Table 2-14 Default Software Configuration 28
Table 3-1 Console Port Setting 33
Table 3-2 Alarm Action Table 34
Table 3-3 System Alarm Type Table 35
Table 3-4 DTE-PORT Alarm Type Table 36
Table 3-5 Alarm Type Numbers 36
Table 3-6 Performance Parameter List 37
Table 3-7 Performance Report Options 38
Table 3-8 Front-Panel LED Table (DS1, DTE, ATM/FR) 39
Table 3-9 Error Message Table 42
Table 6-1 Power consumption 53
Table 14-1 Power Consumption of AM3440-A Plug-in cards for -48 Vdc (100W) 205
Table 14-2 Power Consumption of AM3440-A Plug-in cards for -125 Vdc (100W) Power Module 207

D Bitte führen Sie das Gerät am Ende seinerLewbensdauer den zue Verfügung stehended Rückgabeund Sammelsystemen zu.

GB At the end of the product's useful life, please dispose of it at appropriate collection points provided in your country

F Une fois le produit en fin devie, veuillez le déposer dans un point de recyclage approprié.

ES Para preservar el medio ambiente, al final dela vida útil de su producto, depositelo en los laguares destinado aello de acuerdo con la legislación vigente.

P No final de vida útil do producto, por favor coloque no ponto de recolha apropriado.

I I Onde tutelare l'ambiente, non buttate l'apparecchio trai i normali rifiuti al termine della sua vita utile, ma portatelo presso i punti di raccolta specifici per questi rifiuti previsti dalla normativa vigente.

NL Wij raden u aan het apparant aan het einde van zijn nuttige levensduur, niet bij hey gewone huisafval te deponeren, maar op de dearvoor bestemde adressen.

DK Når produktet er udtjent, bor det børtskaffes via de sæ rlige indsamlingssteder i landet.

N Ved slutten av produktets levetid bør det avhendes på en kommunal miljøstasjon eller leveres til en elektroforhandler.

S Lämna vänligen in produkten på lämplig återvinningsstation när den är förbrukad.

FIN Hävitä tuote käytöiän päättyessä viemällä se asianmukaiseen keräyspisteeseen.

PL Gdy produkt nie nadaje sie juz do dalszego uzytku, nalezy zostawic go w jednym ze specjalnych punktów zajmujacych sie zbiórka zuzytych producktów w wybranych miejscach na terenie kraju.

CZ Po skončení jeho životnosti odložte prosím výrobek na přislušném sběrném místé zřízeném dle předpisů ve vaší zemi.

SK Po skončení jeho životnosti odovzdajte prosím zariadenie na príslušnom zbernom mieste podía platných miestnych predpisov a noriem.

SLO Ko se izdelku izteče življenska doba, ga odnesite na ustrezno zbirno mesto oziroma ga odvrzite v skladu z veljavnimi predpisi.

GR Στο Τέλος της λειτουργικής Ζωής του προϊόντος παρακαλώ
Πετξτε το στα ειδικά σημεία που Παρέχονται οτη χωρα σας.

PRC 當產品使用壽命結束,請在你的國家所提供的適當地點做好回收處理

1 Product Description

1.1 Function Description

For AM3440 Access DCS-MUX:

The Loop-AM3440-A is the Access DCS-MUX that combines various digital access interfaces into E1 or T1 lines for convenient transport and switching. The Loop-AM3440 Access DCS-MUX provides access for a variety of TDM, IP, and voice interfaces detailed on next page. These interfaces are compatible with other Loop products. Using these products, a DTE interface can be extended over copper wire pairs or any E1/T1 transport facility. For each Quad E1/T1 plug-in card, each card can have as many as DS0 124/96 time slots from G.SHDSL, RS232, X.21, V.35, V.36 and EIA530/RS449 interfaces, which can be multiplexed to fill 4 E1/T1 lines. AM3440 also supports fiber optical plug-in card, which can be used to aggregate up to 4 E1 channels onto a single fiber optical interface to connect with other AM3440 or O9310-E1.

AM3440-A has capacity for 12 single slots and 4 mini plug-in slots

This unit is a full cross-connect and can act as a mini DACS. This means that one or more of the WAN ports can be used as a Drop & Insert function with fractional E1/T1 lines, which can be muxed into a full E1/T1 line.

Redundancy is available in dual CPU controller and power supply options, making it an excellent fit for critical applications. Although the chassis does not contain and has no need for fan cooling, an external fan tray is available.

The Loop-AM3440 supports local control and diagnostics by using an external 2-line by 40-character LCD display and keypads, or by using a VT-100 terminal connected to the console port. The Loop-AM3440 also supports Ethernet, Telnet, and SNMP, so that it can be controlled and diagnosed from remote locations as well. An in-band management channel with GUI is available. In addition to the LCD display, there is LED indication for all plug-in cards.

Finally, the Loop-AM3440 consists of a rugged reinforced aluminum chassis, giving this equipment a more durable structure and a longer physical life.

For Loop-VV Y-BOX:

Loop-VV Y-BOX is designed to provide 1 for 1 protection function for Quad E1 interfaces of AM3440 shelf. Two kinds of connector type are available for Y-BOX: BNC connector and RJ48C connectors. Each Y-BOX with BNC connectors support 1 for 1 protection function for 2 Quad E1 interfaces of AM3440, and each Y-BOX with RJ48C connectors support 1 for 1 protection function for 8 Quad E1 interfaces of AM3440

1.2 Physical Description

Although it can be used as a desk-top unit, the Loop-AM 3440 is designed for rack mounting. Typically this unit is to be installed in a Central Office location and is available with choice of single -48Vdc (100W), -48Vdc(150W), -125Vdc (100W). or -24Vdc (150W), order two for redundancy.

Note: If the user orders -125 Vdc power module, the maximum number of particular cards allowed in slot 1 to 12 is: Four 12-channel FXS, Nine 12-channel Magneto, Eleven 8-channel 2W/4W E&M, Six 8-channel OCU-DP, Two 4-channel G. SHDSL (1 pair) with line power, Three 2-channel G. SHDSL (2 pairs) with line power, Two 24-channel FXS.

The front of the unit can accept E1, T1, E1/T1 ATM/Frame Relay, FOM, Router, G.SHDSL, Dry Contact, G.703, C37.94, TDMoE, Data Bridge, DTE (V.35/V.36, X2.1/V.11, EIA530/RS449, and RS232), Conference, E&M, Magneto, FXS/FXO and TS interface lines in 4 mini slots and 12 single slots. Also there is a console port for connection to a VT-100 terminal.

The rear of the unit is blank except for DC fan connectors which will supply power to an external fan tray, if warranted.

1.3 Application

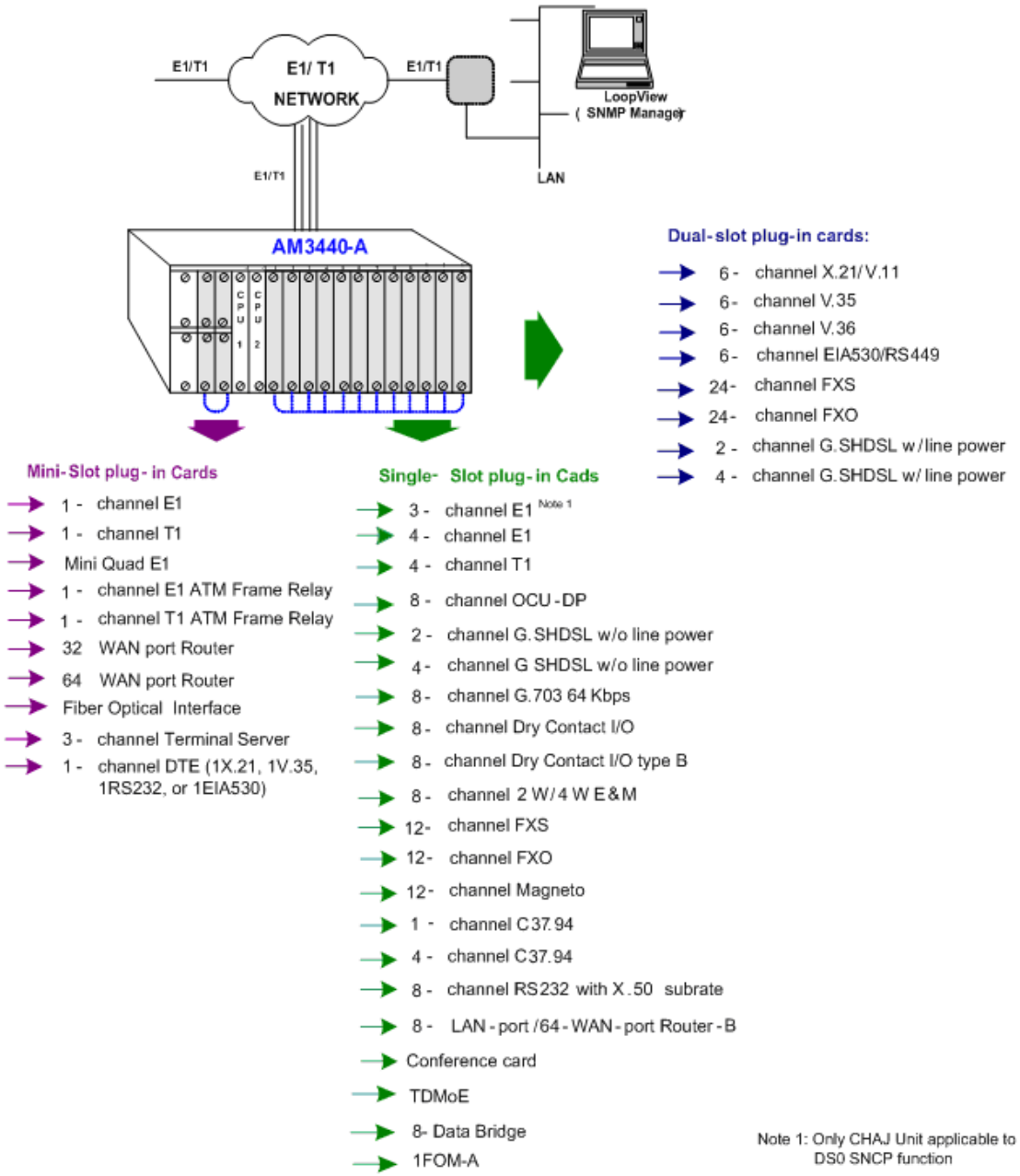

Figure 1-1 Loop-AM 3440 Application Illustration (1 of 2)

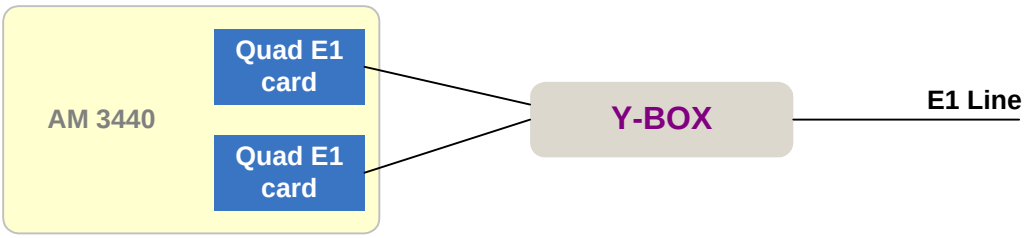

Figure 1-2 Loop-AM 3440 with Y-BOX (2 of 2)

1.4 Specifications for AM3440

Network Line Interface - T1

Line Rate	1.544 Mbps ± 32ppm	Output Signal	DSX1w/0, -7.5, -15 dB LBO
Line Code	AMI or B8ZS	Framing	D4/ESF (selectable)
Input Signal	DSX-1 0 dB to -30 dB w/ALBO	Connector	RJ48C

Network Line Interface - E1

Line Rate	2.048 Mbps ± 50 ppm	Framing	ITU G.704
Line Code	AMI or HDB3	Connector	BNC/RJ48C
Input Signal	ITU G.703	Electrical	75 ohm Coax/120 ohm twisted pair
Output Signal	ITU G.703	Jitter	ITU G.823

Network Line Interface - Mini 4E1

Line Rate	2.048 Mbps ± 50 ppm	Framing	ITU G.704
Line Code	AMI or HDB3	Connector	DB25S
Input Signal	ITU G.703	Electrical	75 ohm Coax/120 ohm twisted pair
Output Signal	ITU G.703	Jitter	ITU G.823

Network Line Interface - 3E1

Line Rate	2.048 Mbps ± 50 ppm	Framing	ITU G.704
Line Code	AMI or HDB3	Connector	BNC/RJ48C
Input Signal	ITU G.703	Electrical	75 ohm Coax/120 ohm twisted pair
Output Signal	ITU G.703	Jitter	ITU G.823
Function	Support DS0-SNCP		

Network Line Interface - 4E1

Line Rate	2.048 Mbps ± 50 ppm	Framing	ITU G.704
Line Code	AMI or HDB3	Connector	BNC/RJ48C
Input Signal	ITU G.703	Electrical	75 ohm Coax/120 ohm twisted pair
Output Signal	ITU G.703	Jitter	ITU G.823

Network Line Interface - 4T1

Line Rate	1.544 Mbps ± 32 ppm	Output Signal	DSX1w/0, -7.5, -15 dB LBO
Line Code	AMI or B8ZS	Framing	D4/ESF (selectable)
Input Signal	DSX-1 0 dB to -30 dB w/ALBO	Connector	RJ48C

ATM Frame Relay Network Line Interface

Supporting Network Interworking (FRF.5) and service interworking (FRF.8).
Network Interface:

- T1 Module: *T1 ATM UNI*
  FR (n x 64 Kbps, n=1 to 24)
- E1 Module: *E1 ATM UNI*
  FR (n x 64 Kbps, n= 1 to 31)

Up to 31 logical FR channels can be concentrated/ de-concentrated to FR or ATM.
Service Ports:

- T1/FT1 interface: *n x 64 Kbps, n=1 to 24*
- E1/FE1 interface: *n x 64 Kbps, n= 1 to 31*

Support HDLC to FR
Support HDLC to ATM
Supporting FR to FR multiplexing.
Support up to 128 DLCIs for total of 31 FR interfaces.
Support up to 128 VCs.
Peak cell rate on DLCI basis.
Manufacturing disable/enable ATM scrambling for internal testing (E1 ATM only).
AAL0 and AAL5 are supported in the ATM adaptation layer.
Support VBR service.
ANSI and ITU FR management protocols are supported.
Flash memory software download through RS485.
Only the PVC type of ATM/FR service is supported.

Router Interface

Number of ports	2 LAN ports, Max. 32 WAN ports
Physical Interface	10 BaseT x 1, 10/100 BaseT x 1
Connector	RJ45
Routing protocol	RIP-I, RIP-II

Data Rates	Channelized N x 64 Kbps, 1≤ n ≤32
Supporting Protocols	TCP/IP, PPP, HDLC

Router-A Interface

Number of ports	2 LAN ports, Max. 64 WAN ports, Each WAN port has data rate n x 64K bps, 1≤ n ≤32 (≤ 4Mbps for total of all 64 WAN ports
Physical Interface	10/100 BaseT x 2
Connector	RJ45
Routing protocol	RIP-I, RIP-II, OSPF, Static
Supporting Protocols	PPP (IPCP/BCP), MLPPP, HDLC, Frame Relay, and Cisco compatible HDLC, NAT/NAPT, DHCP
Diagnostic	Ping, Trace route
QoS	Rate limit

Router-B Interface

Number of ports	8 LAN ports, Max. 64 WAN ports. Each WAN port has data rate n x 64K bps, 1≤ n ≤32 (≤ 8Mbps for total of all 64 WAN ports
Physical Interface	10/100 BaseT x 8
Connector	RJ45
Routing protocol	RIP-I, RIP-II, OSPF, Static
Supporting Protocols	PPP (IPCP/BCP), MLPPP, HDLC, Frame Relay, and Cisco compatible HDLC, NAT/NAPT, DHCP
Diagnostic	Ping, Trace route
QoS	Rate limit

Terminal Server Interface

Connecotr	One DB-44 converseion cable to one DB-9 and two DB-25 connecotrs
Ports	One Async RS232 port, two Async/Sync RS232 ports. The two Async/Sync ports can be configured independently as Asynchronous or Synchronous.
Data Rate	Async: 1.2kbps, 2.4kbps, 4.8kbps, 9.6kbps, 19.2kbps, 38.4kbps Sync: 64 kbps
Layer 2 Protocol of RS232 Async	Raw data, SLIP
Layer 2 Protocol of RS232 Sync	PPP
Terminal Server Function	Supports Telnet
Router Function	RIP- I, RIP-II, Static Route

Fiber Optical Interface / 1FOM-A Interface

Source	MLM Laser	Line Code	Scrambled NRZ
Wavelength	1310 ± 50 nm, 1550 ± 40 nm	Detector Type	PIN-FET
50 Km reach		Protection	Optional 1+1 APS

NOTE: Longer or shorter, 15 to 120Km, on special order.

Optical Fiber Interface Characteristics

Optical Module	Fiber Direction	Wavelength (nm)	Connector	Distance (km)
Single	Dual uni-direction	1310	SC (Subscriber Connector)	30
		1310	SC (Subscriber Connector)	50
		1310	FC (Fiber Connector)	30
		1550	SC (Subscriber Connector)	20
		1550	SC (Subscriber Connector)	100
Single	Single bi-direction (master)	1310/1550	SC (Subscriber Connector)	30
	Single bi-direction (slave)	1310/1550	SC (Subscriber Connector)	30

Chapter 1 Product Description

G.SHDSL Line Interface

Number of ports	2 or 4
Line Rate for 4-channel G.shdsl	n x 64 Kbps (n=3 to 31)
Line Rate for 2-channel G.shdsl	n x 64Kbps (n= 3 to 15)
Line Code	16- TCPAM, full duplex with adaptive echo cancellation
Connecotr	RJ45
Electrical	Unconditioned 19-26 AWG twisted pair
Sealing current	Max. 20 MA source current
Clock Source	From System, Line
Diagnostic Test	G.SHDSL Loopback: To-LINE, To-bus, BERT:QRSS

DTE Interface (X.21)

Data Port	6-port DTE X.21 card; 1-port DTE X.21 card
Data Rate	56 or 64 Kbps, n = 1 to 32
Connector	DB15S

DTE Interface (V.35)

Data Port	6-port DTE V.35 card; ; 1-port V.35 card
Data Rate	56 or 64 Kbps, n = 1 to 32
Connector	DB25S (optional conversion cable DB25S to M34 connector)

DTE Interface (V.36)

Data Port	6-port DTE V.36 card
Data Rate	56 or 64 Kbps, n = 1 to 32
Connector	DB25S (optional conversion cable DB25S to DB37 connector)

DTE Interface (EIA530/RS449)

Data Port	6-port EIA530 DTE card; 1-port EIA530 card
Data Rate	56 or 64 Kbps, n = 1 to 32
Connector	DB25S (optional conversion cable DB25S male to DB37 female connector for RS449)

DTE Interface (RS232)

Data Port	1-port RS232 card
Data Rate	56 or 64 Kbps *n, n=1 - 2
Mapping	Any sequential time slots

DTE Interface (RS232-X.50 mux. 8-port)

Data Port	8-port RS232 cards		
MUX	Maximum 5 subrate port per 64K bps		
Data Rate	Asynchronous	Mux mode	0.6K, 1.2K, 2.4K, 4.8K, 9.6K
		Independent mode	0.6K, 1.2K, 2.4K, 4.8K, 9.6K, 19.2K, 38.4K
	Synchronous	Mux mode	0.6K, 1.2K, 2.4K, 4.8K, 9.6K
		Independent mode	0.6K, 1.2K, 2.4K, 4.8K, 9.6K, 19.2K, 38.4K, 48K, 64K

	Port Number							
Card Type	1	2	3	4	5	6	7	8
Eight RJ48	Async [Note 1]	Async [Note 1]	Async	Async [Note 1]	Async [Note 1]	Async	Async	Async
Two DB44 + Two RJ48	Async/Sync	Async/Sync	Async	Async/Sync	Async/Sync	Async	Async	Async

Connector	Eight RJ48 (port 1 to port 8) DB44 (port1,port2,port3), DB44 (port4,port5,port6), RJ48 (port7) and RJ48(port8)
Conversion Cable	A three-into-one conversion cable adapts the DB44 connector to 3 connecters (one DB9S and two DB25S)
Electrical	RS232 Interface, DCE

Note 1: Up to 19.2 Kbps achieved by oversampling at 64 Kbps

DTE Interface (Data Bridge Card)

Data Port	8-port data bridge card (each card supports up to 120 DS0 for data bridge)
Feature	20 end points per multi-drop circuit to into a logical ended 56K or 64K channel Per port supports bridge function to N remote Trib. Site (N=1~20)

Data Rate	Asynchronous	Support to receive 1200 to 19200 bps asynchronous data via oversampling channel
Bridge function	one port with one DS-0 to many (Maximum is 20 for remote Tributary data box)	

20 drops for each DS0 to remote Tributary data box and 8 ports RS232 shared the 128 channels.

OCUDP Interface Card

Ports	8 Ports for each card
Line Status Indicator	Per Port 1 dual color LED; Red for LOS, Green for SYNC
Network Connector	RJ48S
Electrical Network Connection	Tip/Ring and Tip1/Ring1
Transmit Source Impedance	135 Ohms +/-20%
Receive Input Imdednace	135 Ohms +/-20%
Receiver Sensitivity	0 to 43 dB loop loss at 72K & 56K
Dynamic Range	0 to 34 all other rates Automatic line equalization
Pulse Amplitude	+/- 1.5V (+/-10%) peak, all rates except 9.6K +/-0.75 (+/-10%) peak at 9.6K Bipolar Return to zero, 50 duty cycle
Sealing Current	Typically 16mA DC
Operating Modes	4-wire DDS Switched 56 support is optional
Circuit Rates	SYNC: 2.4, 4.8, 9.6, 19.2, 56, 72 kbps (64k) clear channel Conforms with AT&T Pub 41458
Encoding and decoding rules	Use bipolar violation to indicate control information: Idle, out of service, Zero Subsitution using unframed loops
Maintenance control	DSU Non-latching loop-back code (for 2.4, 4.8, 9.6, 19.2, 56k circuit rate) DSU Latching loop-back (TIP, LSC, LBE, FEV) code (for 72k circuit rate) Machine maintenance OCU/DP card operation: Payload loopback OCU loopback Local loopback Bi-directional loopback V.54 remote loopback code Custom defined remote loopback code BERT test support all ones, all zeros, 2047,511,63 pattern.
Fault and Performance	LOS, OOS, ES, SES and UAS alarm. Current, last 96 registry and 7 days performance storage.
Enviroment	Operating: 0-50°C Storage: -25-75°C Humidity: Up to 90% RH non-condensing
Specification Standard	ANSI T1.410; AT&T Pub 62319, AT&T Pub 62310, ITU-T V.54

Co-directional Interface

Interface	ITU G.703 64 Kbps co-directional interface
Connector	120ohm, RJ48
Line Distance	Up to 500 meters
Loopack	DTE Payload Loopback, Local Loopback

C37.94 Interface

Source	LED
Wavelength	820 nm 2Km reach
Conncetor	ST
Optical Budget	50 Mircon core/9.6 db 62.5 Mircon core/15db

Dry Contact Interface

Inputs -		**Outputs -**	
8-channel	2-port per card, 4-pair per port	8-channel	8-pair per card
Connector	RJ45	Connector	Screw type
Internal Resistance	1 K	Initial Insulation Resistance	Min. 100M ohm (at 500 Vdc)
Activation Current	3 ma	Max. Current	5A
Deactivation Current	1.5 ma	Max. Voltage	100 Vdc, 250 Vac
Allowable Current	4 ma		

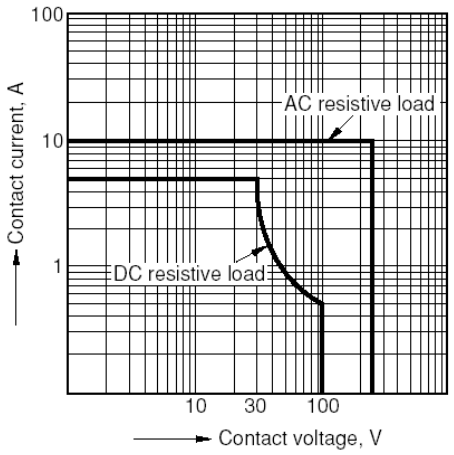

Dry Contact Type B Interface

Inputs -		**Outputs -**	
8-channel	2-port per card, 4-pair per port	8-channel	8-pair per card
Connector	RJ45	Connector	Screw type
Internal Resistance	100 K	Initial Insulation Resistance	Min. 1000M ohm (at 500 Vdc)
Activation Current	3 ma	Max. Current	2A
Deactivation Current	1.5 ma	Max. Voltage	220 Vdc, 250 Vac
Allowable Current	4 ma		

Voice Card (Q2EM, Q4EM)

Connector	DB44 connector with external DB44 to 4 RJ45 connector cable
Alarm Conditioning	CGA busy after 2.5 seconds of LOS, LOF
Encoding	A-law or μ-law, user selectable per card
Impedance	Balanced 600 ohm or 900ohm
Longitudinal Conversion Loss	> 46dB
Longitudinal Balance	> 63dB
Gain Adjustment	Normal mode 0, -3, -6 or +7 dB for transmit (D/A) gain
(all port settings)	0, -3, -6 or +10 dB for receive (A/D) gain
Signal/Distortion	> 25dB with 1004 Hz, 0dBm input
Frequency Response	+0.5 to -0.9db from 300 to 3400 Hz
Idle Channel Noise	Max. –65 dBm0p
Signaling	Type I, II, III, IV, V and TO (Transmit Only) signaling options (manufacture option)
	Side: A or B (manufacture option)
	Wire: 2 wire or 4 wire (manufacture option)
In-band signaling tones	transparent
Modems	Full compatibility with V.90 modems

Voice Card (8EM)

Connector	Eight RJ45
Alarm Conditioning	CGA busy after 2.5 seconds of LOS, LOF
Encoding	A-law or μ-law, user selectable together for all
Impedance	Balanced 600 or 900 ohms
Gain Adjustment (Per-port setting)	-16 to +7 dB / 0.1dB step for transmit (D/A) gain
	-16 to +14 dB / 0.1dB step for receive (A/D) gain
I/O Power Range	A/D Analog input level: -66 dBm (0.00039 Vrms) ~ + 3 dBm (1.09 Vrms)
	D/A Analog output level: -66 dBm (0.00039 Vrms) ~ + 4 dBm (1.22 Vrms)
Gain Variation	± 0.5 dB at 0 dBm0 input
Frequency Response	± 0.5 dB at 0 dBm0 input
Longitudinal Conversion Loss	> 46dB
Total Distortion	> 35 dB at 0 dBm0 input
Idle Channel Noise	Max. –65 dBm0p
Carrier Connection	Side A (exchange side) and Side B (carrier side) setup by side switch
Wire Mode	2 wire and 4 wire (programmable)
Signaling	Type 1, Type 2, Type 3, Type 4, and Type 5, Transmit only (programmable)
Modems	Full compatibility with V.90 modems

All in-band signaling tones are carried transparently by the digitizing process.
Customer is responsible for in-band signaling compatibility between a telephone and a switch, or between a PBX and a switch.

Voice Card 12 MAG (Magneto)

Connector	Twelve RJ11
Alarm Conditioning	CGA busy after 2.5 seconds of LOS, LOF
Encoding	A-law or μ-law, user selectable together for all
Impedance	Balanced 600 or magneto telephone impedance match
Longitudinal Conversion Loss	> 46dB
Gain Adjustment	-21 to +10 dB / 0.1dB step transmit & receive
Signal/ Distortion	> 25dB with 1004 Hz, 0dBm input
Frequency Response	- 0.25 to -1 dB from 300 to 3400 Hz, coincide with ITU-T G.712
Idle Channel Noise	Max. –65 dBm0p
Min Detectable Ringing Voltage	16 Vrms
Ringing Detectable Across	L1 and L2 (Tip and Ring), L1 and GND (Tip and GND)
Ringing Generation	Voltage: 76 Vrms (sine wave) Frequency: 20Hz (with optional choices of 16, 25, 50 Hz) Cadence: 1. Normal: Ring after crank 2. PLAR ON: -Single Ring Type: ring for 2 sec. and stop, or ring for 4 sec. and stop -Continuous Ring Type: 1 sec on 2 sec off, or 2 sec on 4 sec off
Ringing Send Across	L1 and L2 (Tip and Ring), L1 and GND (Tip and GND)
Signaling	Magneto MRD(Ringing across Tip and Ring or Tip and Ground)
Signaling Bit A,B,C,D	Programable

Signaling is carried transparently by the digitizing process.
Use Magneto card default setting for communications between magneto telephones
Use Magneto card PLAR mode setting for communications between a magneto telephone and a regular telephone

Conference Card

RS232 Interface	
Data Port	2-ports per card
ASYNC Data Rate	300, 600, 1.2K, 2.4K, 4.8K, 9.6K, 19.2K
SYNC	not supported
Connector	Two DB9, DCE, female
FXS Voice Interface	
Connector	Two RJ11
Encoding	G.723
Longitudinal Conversion Loss	> 46dB
Cross Talk Measure	Max -70dBm0
Gain Adjustment	transmit (D/A) gain 0, +6dB receive (A/D) gain +6, 0, -6dB
Signal/ Distortion	> 25dB with 1004 Hz, 0dBm input
Idle Channel Noise	Max. –65 dBm0p
Loop Resistance	Max 1800 ohm
FXS Loop Feed	Normal -48 Vdc with 25mA current limit
FXS Ringing	2 REN 20Hz 76 Vrms 2 sec on / 4 sec off for 1 min, or 1 sec on / 2 sec off for 30 sec (programmable)
Signaling	Loop Start, DTMF
E&M Voice Interface	
Connector	Two RJ45
Encoding	G.723
Impedance	Balanced 600 ohms
Longitudinal Conversion Loss	> 46dB
Gain Adjustment	transmit (D/A) gain 0, +6dB receive (A/D) gain +6, 0, -6dB
Signal/Distortion	> 25dB with 1004 Hz, 0dBm input
Idle Channel Noise	Max. –65 dBm0p
Carrier Connection	Side A = exchange side, Side B = carrier side (Jumper selectable)
Phone line power+12V	Type P (Jumper enable)
Operation mode	Master, standard (Jumper selectable)
Wire Mode	4 wire
Signaling Type	Type 1, Type 4, and Type 5 (Jumper selectable)
EM Ringing	Single rainging for 5 sec only 2 sec on / 4 sec off for 1 min, or 1 sec on / 2 sec off for 30 sec (programmable)

Chapter 1 Product Description

Voice Card (QFXS, QFXO)

Connector	Four RJ11	
Alarm Conditioning	CGA busy after 2.5 seconds of LOS, LOF	
Encoding	A-law or μ-law, user selectable per card	
AC impedance	Balanced 600 or 900 ohms, user selectable per card	
Longitudinal Conversion Loss	> 46dB	
Loss Adjustment	0,3,6, or 9 dB transmit & receive, user selectable per card	
Signal/Distorition	> 25dB with 1004 Hz, 0dBm input	
Frequency Response	-0.25 to -1 dB from 300 to 3400 Hz	
FXS Loop Feed	Nominal -48 Vdc with 25mA current limit per port	
FXS Ringing	1 REN at 5000 meters per port	
	20 Hz, other frequencies (manufacture option): 16.7 Hz, 25 Hz, 50 Hz	
	76 Vrms (sine wave)	
	User selectable ring cadence per card for PLAR function: 2 sec on 4 sec off, or 1 sec on 2 sec off	
FXO Ringing REN	Ringing REN	0.5B (AC)
	Detectable Ringing	25 Vrms
	Loop Resistance	≤ 1800 Ω
	DC impedance (ON-HOOK)	> 1M Ω
	DC impedance (OFF-HOOK)	235 Ω @ 25mA feed
		90 Ω @ 100mA feed
Metering Pulse	12 KHz/16 KHz	
	Power: 10dBm	
	Sensitivity: -18dBm to -45dBm (manufacture option)	
Signaling	Loop Start, GND-Start, Metering Pulse (12 KHz, 16 KHz), DTMF, Dialing Pulse, PLAR, Battery Reverse (support Line Reverse Signaling for Billing)	
Inband Singaling Tone	transparent	

Voice Card (12FXS,12FXO,24FXS,24FXO)

12 FXS/FXO Connector	Twelve RJ11	
24 FXS/FXO Connector	One RJ21X Female	
Alarm Conditioning	CGA busy after 2.5 seconds of LOS, LOF	
Encoding	A-law or μ-law, user selectable together for all	
AC Impedance	Balanced 600 or 900 ohms (selectable together for all)	
Longitudinal Conversion Loss	> 46dB	
Cross talk measure	Max -70dBm0	
Gain Adjustment	-21 to +10 dB / 0.1dB step transmit & receive	
Signal/ Distortion	> 25dB with 1004 Hz, 0dBm input	
Frequency Response	- 0.25 to -1 dB from 300 to 3400 Hz, coincide with ITU-T G.712	
Idle Channel Noise	Max. –65 dBm0p	
Variation of Gain	±0.5dB	
FXO	Ringing REN	0.5B (AC)
	Detectable Ringing	25 Vrms
	Loop Resistance	≤ 1800 Ω
	DC Impedance (ON-HOOK)	> 1M Ω
	DC Impedance (OFF-HOOK)	235 Ω @ 25mA feed
		90 Ω @ 100mA feed
FXS Loop Feed	-48Vdc or -24Vdc with 25mA current limit per port	
	Jumper Selectable: 25mA, 30mA, 35mA	
FXS signalling	Normal / Automatic Ring down	
FXS Ringing	1 REN at 5K meters per port	
	16.7Hz, 20Hz, 25Hz, 50Hz, user selectable for all ports	
	38 to 85 Vrms (sine wave), 76 Vrms for default Ring Voltage	
	2 sec on 4 sec off, or 1 sec on 2 sec off optional for PLAR	
Signaling	Loop Start, DTMF, pulse, PLAR, Battery Reverse	
Optional Signaling (for special order)	Ground Start, Metering pulse (12 KHz, 16 KHz), and P(in PLAR mode, PLAR signalling bits are programmable.	
Signaling Bit A,B,C,D	Programable bit	

- All in-band signaling tones are carried transparently by the digitizing process.
- Customer is responsible for in-band signaling compatibility between a telephone and a switch, or between a PBX and a switch.
- -24Vdc power is for FXS PCB version L and up

Phone Line Monitor Card

Connector	Four RJ11 connectors
Alarm Conditioning	CGA busy after 2.5 seconds of LOS, LOF
Encoding	A-law or μ-law, user selectable as a group
Impedance	Balanced 15K Ohm
Total Distortion	> 35dB with 1004 Hz, 0dBm input
Frequency Response	0 ~ -0.5 dB from 300 to 2000 Hz
	-0.5 dB ~ -2 dB from 2000 to 3300 Hz
Idle Channel Noise	> -60 dBm0
Gain Adjustment	0, -3, -6 or +7 dB for PLM (B) transmit gain (D/A)
(All Port Setting)	0, -3, -6 or +3dB for PLM (A) receive gain (A/D)
Off-Hook Detect Level	< -6V Line to GND
Operational Temp.	0°C to 50°C
Relative Humidity	0% to 95%
Power	110 ~ 220 VAC, -48 Vdc

All in-band signaling tones are carried transparently by the digitizing process.

Signaling Bits

Status		Normal								AB Bit Invert							
		Tx				Rx				Tx				Rx			
		A	B	C	D	A	B	C	D	A	B	C	D	A	B	C	D
PLM (A) to Line	Line On Hook	1	1	0	1					0	1	0	1				
	Line Off Hook	0	1	0	1					1	1	0	1				
PLM (B) to Monitor	Battery (-48V)					1	1	0	1					0	1	0	1
	Battery (-6V)					0	1	0	1					1	1	0	1

TDMoE

Combo Gigabit Ethernet(GbE) Interface

Number of Ports	2
Speed	10/100/1000M bps
Connector	RJ45 for twisted pair GbE, LC for optical GbE, auto detection

Gigabit Ethernet(GbE) Interface

Number of Port	2
Speed	10/100/1000 BaseT
Connector	RJ45

Ethernet Function

Basic Features	MDI/MDIX for 10/100/1000M BaseT auto-sensing
	Ping function contained ARP
	Per port, programmable MAC hardware address learn limiting (max. MAC table 8192 (8k) entry)
	Packet Delay Variation: - Unframed T1: Up to 340 ms - Framed T1: Up to 256 ms - E1:up to 256 ms - Framed T1 with CAS: Up to 192 ms
Packet Transparency	Packet transparency support for all types of packet types including IEEE 802.1q VLAN and 802.1ad (Q-in-Q)
QoS	User configurable 802.1p CoS, ToS in out going IP frame
Traffic Control	Ingress packet Rate limiting buckets per port for Ethernet port
	Supporting Rate-based and Priority-based rate limiting for LAN port
	Granularity: a. From 64 Kbps to 1 Mbps in increments of 64 Kbps b. From 1 Mbps to 100 Mbps in increments of 1 Mbps c. From 100 Mbps to 1000 Mbps in increments of 10Mbps
	Pause frame issued when the traffic exceeding the limited rate before packet dropped following IEEE802.3X

Jitter & Wander

PPM: per G.823 Traffic

PPB: per G.823 Synchronous*

Standard Compliance

IETF	TDMoIP (RFC5087), SAToP (RFC4553), CESoPSN (RFC5086)
IEEE	802.1q, 802.1p, 802.1d, 802.3, 802.3u, 802.3x, 802.3z, 802.1s, 802.1w

Clock Source

Internal, Line Interface, External (E1/T1/2048 KHz)

Alarm Relay

Alarm Relay: max. current: 1A for 24VDC/ 0.625A for 48VDC

Fuse alarm, and performance alarm

System Configuration Parameters

Active Configuration, Stored Configuration, and Default Configuration (Stored in Non-volatile Memory)

Management

Console	Electrical: RS232; Connector: DB9, female User Interface: Menu driven VT-100
Ethernet	1 port, Connector: RJ45 10/100 Base T, SNMPv1, v3/Telnet/SSH
Inband Management	Inband 64 Kbps, support HDLC/PPP
Ethernet LCD	Optional

Performance Monitor

Performance Registers	Last 24 hours performance in 15 minute intervals and last 7 days in 24 hour summaries
Separate Registers	Network, user, and remote site
Performance Reports	Reports include E1 Bursty Errored Second, Severe Errored Second, Degraded Minutes. Also available in Statistics (%)
Alarm Queue	Containing 300 alarm records which record the latest alarm type, location, and date & time
Threshold	Bursty Seconds, Severely Errored Second, Degraded Minutes

Diagnostics

Loopback	E1/T1 interface (Line Loopback, Payload Loopback, Local Loopback)
Test Pattern	For Controller: 2^{20}-1, 2^{15}-1, 2^{11}-1, 2^{9}-1, and 4-bye user define pattern

Physical /Electrical

Dimensions	432.4 x 220 x 223.5 mm (W×H×D)
Power	Single/ Dual -48 Vdc: -36 to -75 Vdc, 100 Watts max. Single/ Dual -48 Vdc: -36 to -75 Vdc, 150 Watts max. Single/ Dual -24 Vdc: -18 to -36 Vdc, 150 Watts max Single/ Dual -125 Vdc: -40 to -150 Vdc, 100 Watts max
Temperature	0-55°C
Humidity	0-95%RH (non-condensing)
Mounting	Desk-top stackable, 19” /23” rack mountable
Line Power Supply	Available only with DC power for G.SHDSL card only
Power Consumption	Max 110 Watts

Certification

EN55022 Class A, EN50024, FCC Part 15 Class A, FCC Part 68, CS-03, IEC60950, UL60950

Compliance

ITU G.703, G.704, G.706, G.732, G.736, G.823, G.826, G.711, G.775, O.151, V.11, V.28, V.54
IETF SNMP v.3 (RFC2571~2575)

Specifications for Loop-VV Y-BOX

LINE

Connector	BNC or RJ48C
Port Number	For Y-BOX with BNC connectors: 4 line ports For Y-BOX with RJ48C connectors: 16 line ports
Protection	For Y-BOX with BNC connectors: support 2 Quad E1 plug-in card, 4 active E1, 4 standby E1 For Y-BOX with RJ48C connectors: support 8 Quad E1 plug-in cards, 16 active E1, 16 standby E1 For Y-BOX with RJ48C connectors: support 8 Quad T1 plug-in cards, 16 active T1, 16 standby T1

Mechanical

Height	44.5 mm/ 1.75 in
Width	432 mm/ 17 in
Depth	100 mm/ 3.9 in

* Future Option

Front Panel View (with BNC connectors)

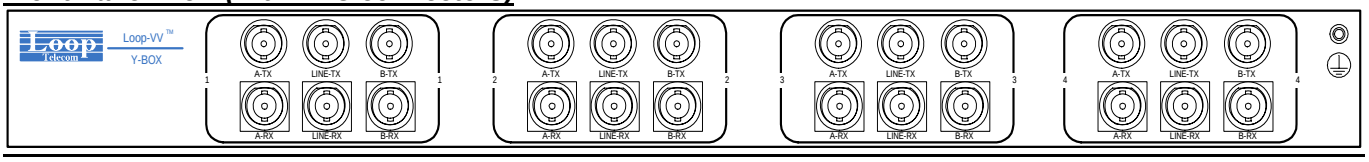

Front Panel View (with RJ48C connectors)

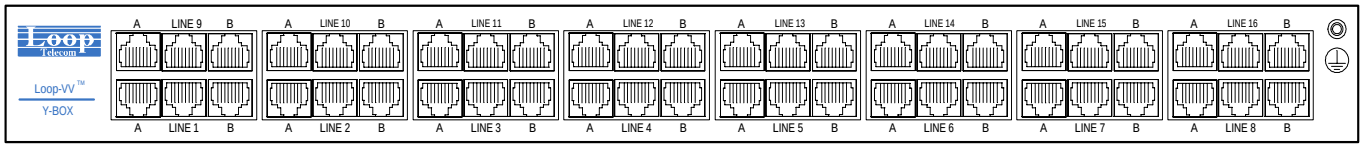

2 Installation

CAUTION:

- **Only qualified service personnel shall install and maintain the system.**
- **This equipment must be connected to an earth socket-outlet, which has a permanent connection to protective earth with a cross-sectional area of not less than 2.5 mm^2.**
- **Ensure protective earthing connected before install /uninstall telephone wires.**
- **Never install telephone wiring during a lightning storm.**
- **Never install telephone jacks in wet locations unless the jack is specifically designed for wet locations.**
- **Never touch uninsulated telephone wires or terminals unless the telephone line has been disconnected at the network interface.**
- **Use caution when installing or modifying telephone lines.**

2.1 Site Selection

The following list indicates a site selection guideline. User need to follow this guideline to select a proper installation site.

- Location of the Rack should be part of the central office equipment layout design. Considerations should be given to entrance cable routing and -48 Vdc (100W), -48 Vdc (150W), -125 Vdc (100W) or -24 Vdc (150W) power.
- The installation site should have -48 Vdc power. An optional AC/DC power converter can be used. Use only with Class 2 power source, -48 Vdc, 100 watts.

2.2 Mechanical Installation

AM3440 can be installed as a desk top unit or mounted on a 19 inch or a 23 inch rack. Mounting of the unit in a rack follows standard telephone rack mount practices. Accessories to install on a 19 inch or 23 inch rack is provided. As a desk-top unit AM3440 is stackable.

2.3 Electrical Installation

Central office -48 Vdc power is wired to terminal blocks in the front of the AM3440, shown in Figure 2-1. Central office alarm system is wired to the Alarm Relay terminal blocks. For connection to the CONSOLE (button down/ button up) connector for maintenance and administration, a CONSOLE port with DB9 connector is located on the front panel, see also Figure 2-1. The RJ45 connector is for an Ethernet connection. For direct modem or VT-100 terminal connection, use a null modem cable to connect the CONSOLE port on the front panel.

NOTE: When AM3440 is plugged with two CPU cards, both of these two CPU cards can be primary (master) or redundant (slave) which only depends on which CPU card completes boot up first after powering on the main unit. User can tell which CPU card is primary or redundant from the status of CPU card's ACTIVE led. If ACTIVE led is flashing green, the CPU card is primary. When one CPU fails, the other becomes master and remains master even when the failed is replaced.

2.3.1 Chassis Grounding

The chassis ground screw is located in the right hand side of the rear panel.

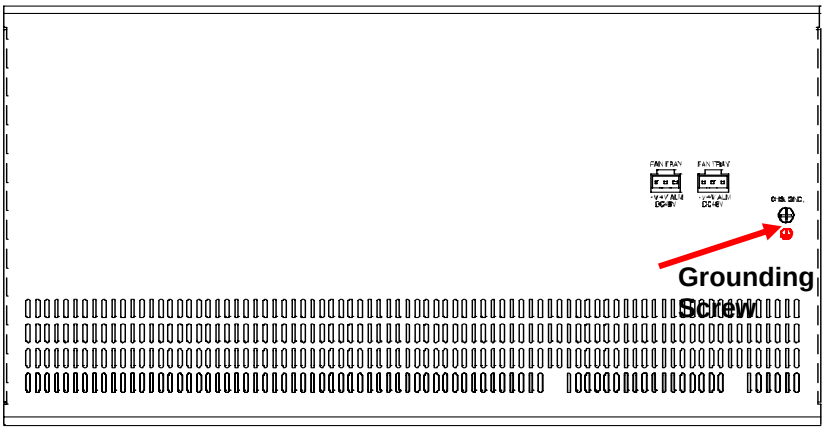

Figure 2-1 Ground Screw Location

When attaching a ground wire to the chassis ground screw, please follow these instructions.

- Use copper grounding conductors of 18 AWG
- Conductors should not be of dissimilar metals.
- The bare conductors should be coated with anti-oxidant before crimp connections are made.
- Any unplated connection surfaces, connectors, braided strap and bus bars must be bought to a bright finish and coated with anti-oxidant before connections are made.

2.3.2 Electrical Installation Guide

The application drawing of DC power with grounding and without grounding are shown below.

Note: When the user uses DC power without grounding (⏚), noise problems and E1 errors may occur.

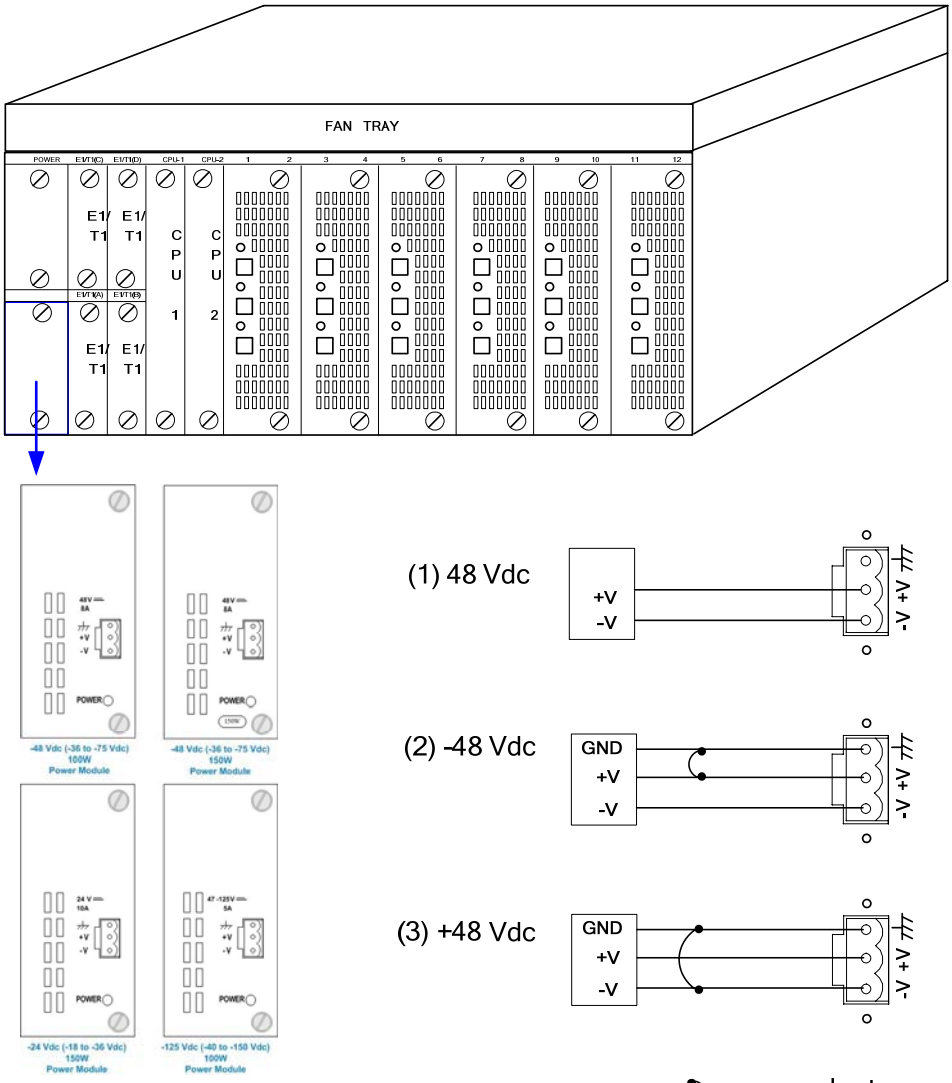

Note: 12FXS/FXO, 24FXS/FXO, 8EM, 12 MAG can not use +48 Vdc.

: means short

Figure 2-2 DC Power Without Grounding Application

For Dual-CTRL protection:

NOTE: When an AM3440 has two controller plug-in cards, on applying power, the left controller (CTRL1) will always be the primary, and the right controller (CTRL 2) will always be the redundant. If the redundant card's configuration is different from the primary, the redundant CTRL will synchronize its configuration from the primary CTRL after the boot up and initiation process.

This synchronized takes 1-2 minutes. During configuration synchronization, the LED will show the following sequence

1. LED for primary CTRL: <power> green, <active> flashing green.
2. LED for redundant CTRL: <power> flashing green, <active> dark.

Redundant CTRL will send heart beat every 0.5 second. After 5 consecutive no response from primary CTRL, meaning primary CTRL dead, redundant CTRL will take over AM3440 and become primary. Primary warm restart (reset) will not switch control back to the left CTRL, while Primary cold restart will switch. Switching time is less than 50ms.

Condition: To avoid sync failure, the brand and the firmware version of CTRL1 and CTRL2 should be the same.

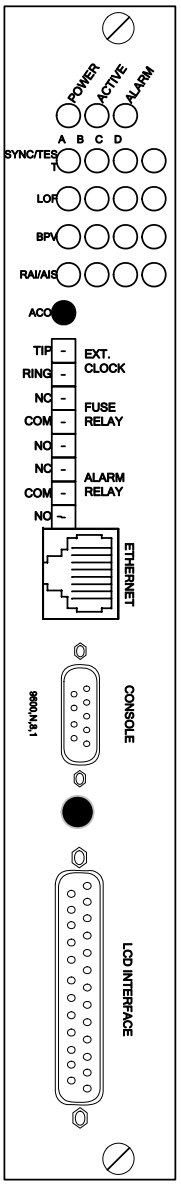

CPU

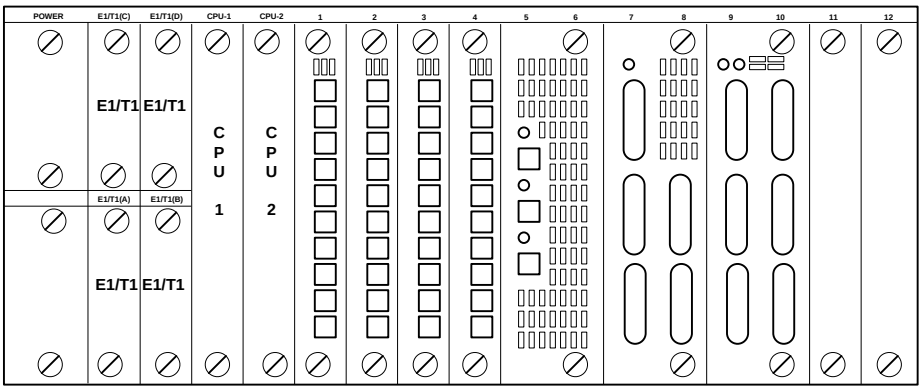

Main Access DCS-Mux Shelf - Front Side

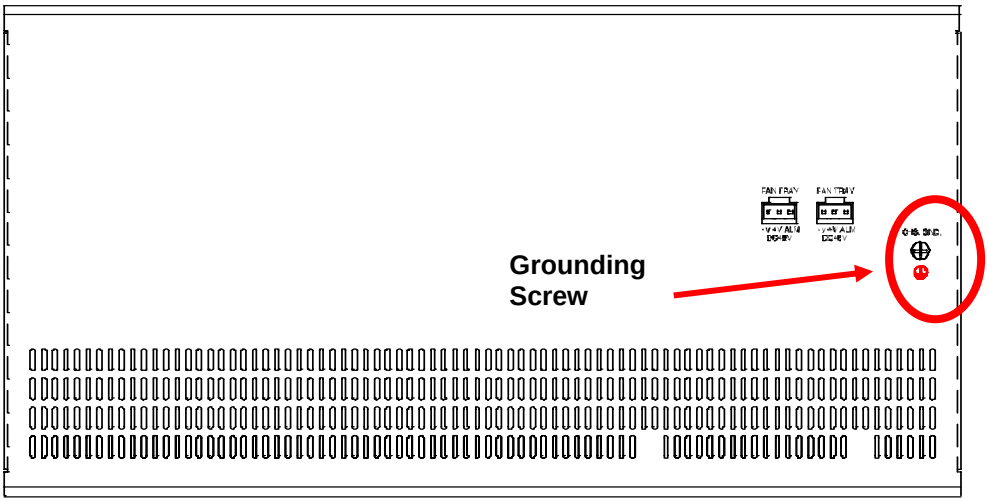

Main Access DCS-Mux Shelf - Rear Side

Figure 2-3 Panel Views - Main Shelf and CPU

OTE:	When these plug-in cards(two CPU cards, four mini Quad E1 plug-in cards, ten G.shdsl plug-in cards, and one 100W UM5813 power module) are plugged into an AM3440, one more 100W UM5813 power module should be added to plug into the AM3440.

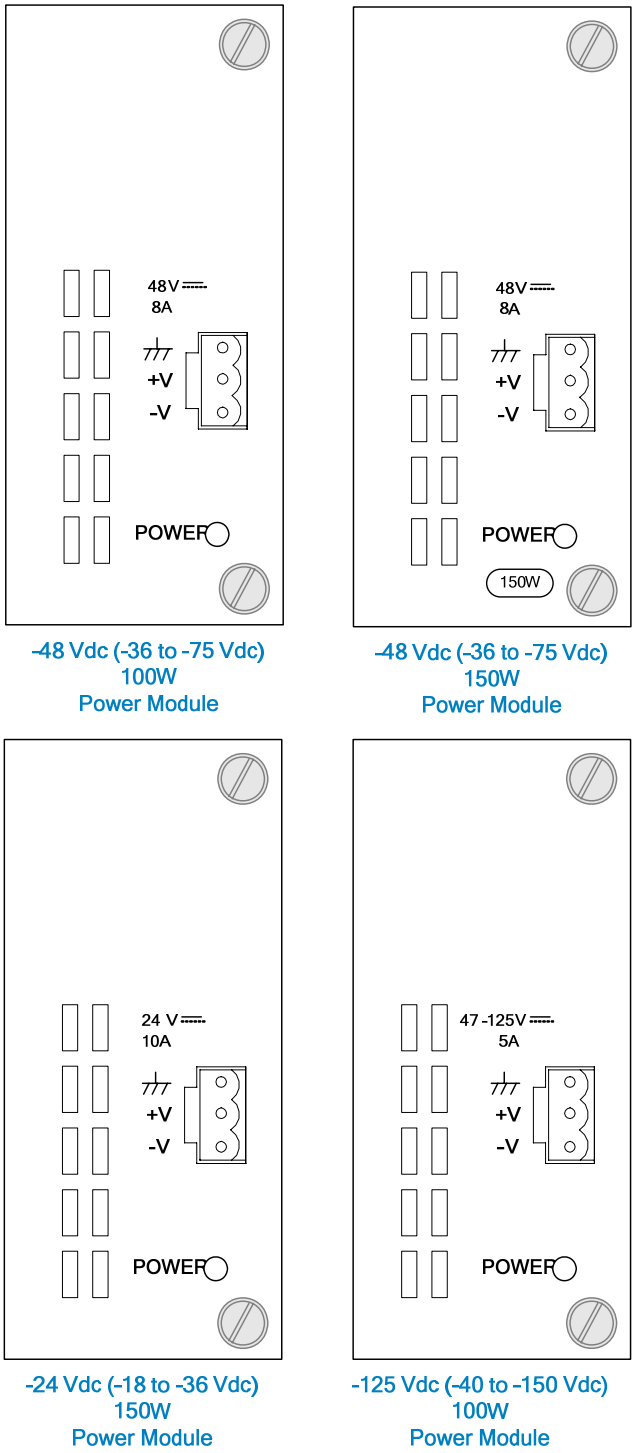

Figure 2-4 Panel Views (for 1/2 slot) - Power Modules

2.3.3 Fan Tray Setting

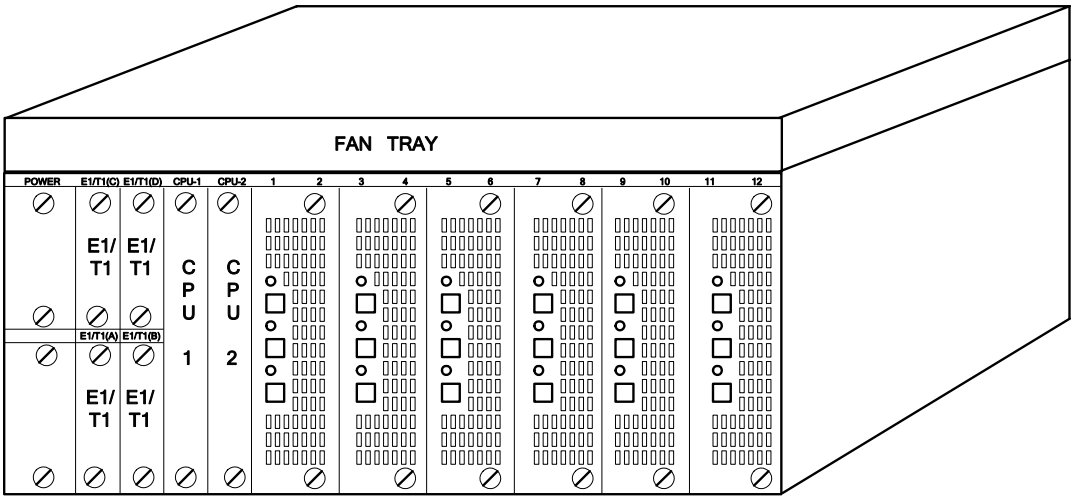

Important Note:	Install a fan tray on the top of a AM3440 to reduce the temperature when the following modules are plugged into the AM3440 at the same time: 1. G.shdsl plug-in card with line power module The fan power socket in the back of the AM3440 chassis would be activated if it use -48 Vdc power supply. In addition, the fan power module will not work when it use -24 Vdc power supply.

Figure 2-5 Front Panel View - Fan Tray

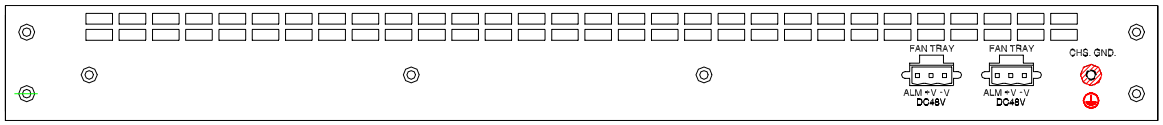

Figure 2-6 Rear Panel View - Fan Tray

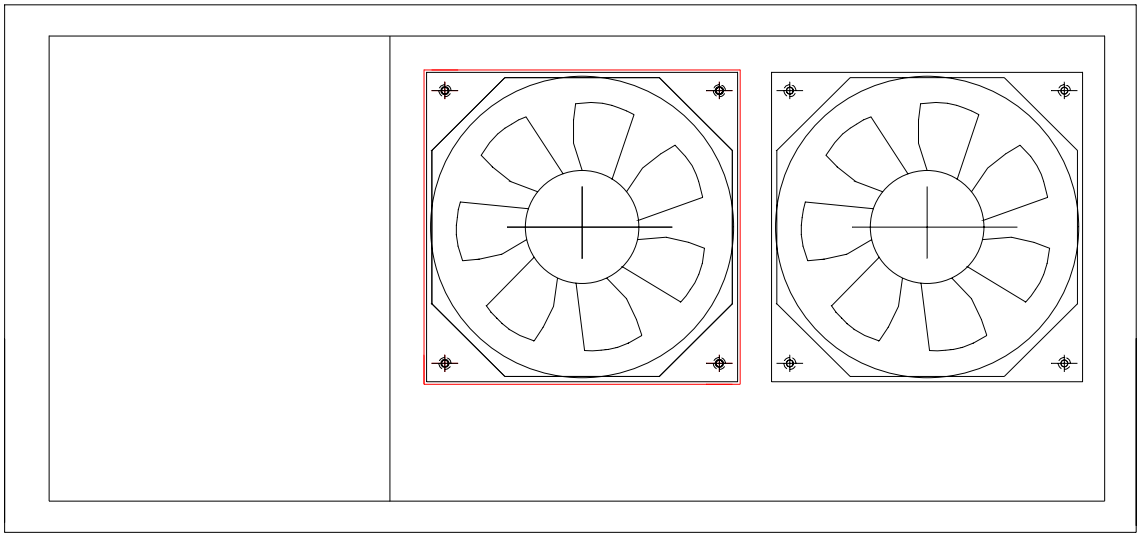

Figure 2-7 Top View - Fan Tray

Table 2-1 Power Connector for Fan Tray

Signal	Description
ALM	Alarm
+ V	+DC Return
- V	-DC 48 Volts

Table 2-2 Power Connector for Main Unit

Signal	Description
-V	-DC 48 Volts
+V	+DC Return
⏚	Chassis Ground

The console port is configured as a DCE device with a DB-9 female connector. Pin definitions and pin connections are listed in Table below.

Table 2-3 Console Port

Pin Number	Signal	Source
1	Data Carrier Detect	To DTE
2	Receive Data	To DTE
3	Transmit Data	From DTE
4	Unassigned	
5	Signal Ground	
6	Data Set Ready	To DTE
7	Unassigned	
8	Clear to send	To DTE
9	Unassigned	

Ethernet port can be connected via Ethernet 10-Base-T interface. Pin definition is listed in Table below.

Table 2-4 Ethernet Port

Pin Number	Signal	Description
1	TPTX+	TP Driver Output
2	TPTX-	
3	TPRX+	TP Receive Input
6	TPRX-	

2.3.4 Alarm Relay

The Alarm Relay is applied to configure the Alarm Relay output present on the front panel of AM3440 Controller Card. Alarm Relay outputs are provided for operators to drive external alerting devices, such as flashing lights and sirens. The Alarm Relay signals when the device has exceeded its alarm severity. The Alarm Relay will act on pre-set conditions configured by the user according to the tables below. When the alarm setup is **Enabling**, the alarm relay circuit will be triggered if the alarm is detected. To return the alarm relay to the normal state after it is enabled, the user has three modes to choose from: Auto, Period and Manual. For detailed information, please refer to the section “System Alarm Setup” in the chapter of “System Setup”. When the alarm setup is **Disabling**, the alarm relay circuit will stay in the normal state. Activated alarm relay can be deactivated by pushing the ACO (Alarm Cut-Off) button.

Table 2-5 Alarm Relay Circuit Contact State When Alarm Setup is Enable

Circuit / Condition	NC + COM	NO + COM
System Power Off	Short	Open
Alarm On	Open	Short
Normal State for Auto, Period and Manual Mode: Alarm Cut Off or No Alarm	Short	Open

Table 2-6 Alarm Relay Circuit Contact State When Alarm Setup is Disable

Circuit / Condition	NC + COM	NO + COM
System Power Off	Short	Open
System Power On	Short	Open
Alarm On	Short	Open

Note: The maximum voltage for the alarm relay is 48Vdc, and the maximum current is 1A.

2.3.5 Fuse Relay

The fuse relay will be triggered when the condition of the power supply changes (ON/OFF). For example, when the power is “ON”, NC will open relative to COM, and NO shorted relative to COM. If the fuse in the power supply card is brown (“OFF”), NC will be shorted relative to COM, and NO will be open relative to COM.

Table 2-7 FUSE Relay Connector

Circuit / Condition	NC + COM	NO + COM
System Power Off	Short	Open
System Power On	Open	Short

2.3.6 Jumper Location for Mini Quad E1 card

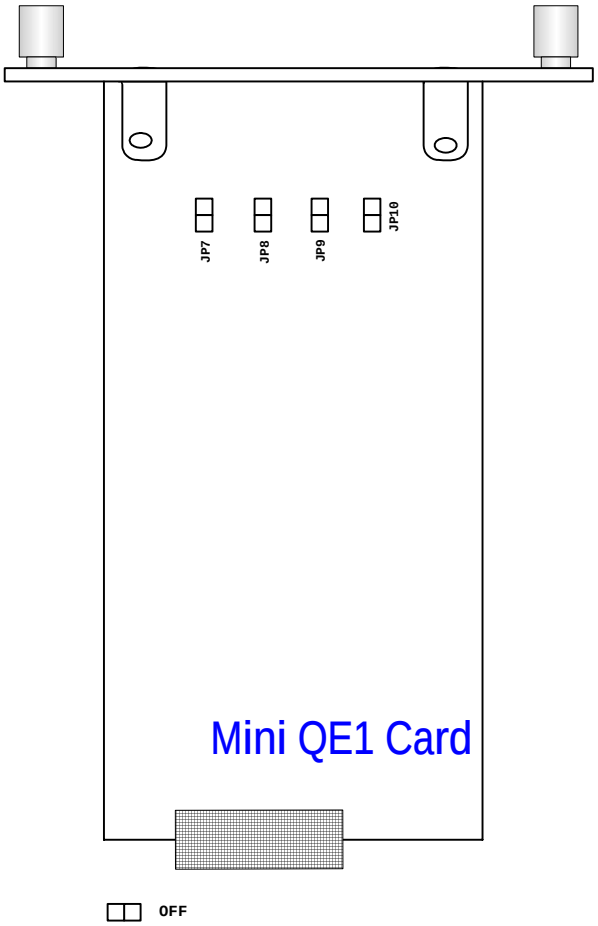

Figure 2-8 Jumper Location for Mini Quad E1 Interface

Table 2-8 Circuit protection for Mini Quad E1 Interface

Jumper	Circuit Protection
7	OFF
8	OFF
9	OFF
10	OFF

2.3.7 Line Power Option

The line power option only available on G.SHDSL cards which takes 2 DTE slots per card. It is factory installed option available with -48 Vdc, 125Vdc powered chassis only. Also, Fan tray is required.

2.4 Configuration Setting

2.4.1 Software Configuration Setting

There are four system configurations:

- Factory default
- Current working
- User stored
- Link backup

The factory default configurations are not changeable. Each Loop-AM is shipped with all three configurations set to the factory default configuration.

The current working configuration, which can be saved into nonvolatile memory as a user-stored configuration, can be changed at any time. When the system is reset, the previous configuration will be retrieved as the current working configuration.

The user-stored configuration can be retrieved at any time. User can retrieve the user-stored configuration to overwrite the current working configuration. Please refer to the section of **Store/ Retrieve Configuration** for the detail operation.

The link backup configuration are the 1:1 and 1+1 protection schemes which only available in single E1/T1, FOM(mini slot) and 1FOMA (single slot) cards. This occurs when the system is set up so that a backup line (or lines in the case of 1: n) will be switched into service if the working line fails. Please refer to the section of **Link Backup Function** for the detail operation.

2.4.2 Replacement of Plug-in card

When a plug-in card is removed and replaced with a plug-in card of a different type, default configuration is assigned to the new plug-in card. The user must set the configuration for each change of plug-in card type. If the same type plug-in card is inserted, depending on plug-in card type.

Table 2-9 V.35/DB25 DTE Port Pin Definition

Pin Number	Signal	Source
1	Cable Shield	
2	Transmit Data	DTE
3	Receive Data	DCE
4	Request To Send	DTE
5	Clear To Send	DCE
6	Data Set Ready	DCE
7	Signal Ground	
8	Data Carrier Detect	DCE
9	Receive Clock Return	DCE
10	Unassigned	
11	External Clock Return	DTE
12	Transmit Clock Return	DCE
13	Unassigned	
14	Transmit Data Return	DTE
15	Transmit Clock	DCE
16	Receive Data Return	DCE
17	Receive Clock	DCE
18	Local Loopback	DTE
19	Unassigned	
20	Data Terminal Ready	DTE
21	Remote Loopback	DTE
22	Unassigned	
23	Unassigned	
24	External Clock	DTE
25	Test Mode	DCE

Table 2-10 V.36/ EIA530/ DB25 DTE Port Pin Definition

Pin Number	Signal	Source
1	Cable Shield	
2	Transmit Data	DTE
3	Receive Data	DCE
4	Request To Send	DTE
5	Clear To Send	DCE
6	Data Set Ready	DCE
7	Signal Ground	
8	Data Carrier Detect	DCE
9	Receive Clock Return	DCE
10	Data Carrier Detect Return	DCE
11	External Clock Return	DTE
12	Transmit Clock Return	DCE
13	Clear To Send Return	DCE
14	Transmit Data Return	DTE
15	Transmit Clock	DCE
16	Receive Data Return	DCE
17	Receive Clock	DCE
18	Local Loopback	DTE
19	Request To Send Return	DTE
20	Data Terminal Ready	DTE
21	Remote Loopback	DTE
22	Data Set Ready Return	DCE
23	Data Terminal Ready Return	DTE
24	External Clock	DTE
25	Test Mode	DCE

Table 2-11 X.21/V.11 and DB15 DTE Port Pin Definition

Pin Number	Signal	Source
1	Cable Shield	
2	Transmit Data	DTE
3	Control	DTE
4	Receive Data	DCE
5	Indication	DCE
6	Signal Timing	DCE
7	External Clock	DTE
8	Signal Ground	
9	Transmit Data Return	DTE
10	Control Return	DTE
11	Receive Data Return	DCE
12	Indication Return	DCE
13	Signal Timing Return	DCE
14	External Clock Return	DTE
15	Unassigned	

Table 2-12 RS232/DB25 DTE Port Pin Definition

Pin Number	Signal	Source
1	Cable Shield	
2	Transmit Data	DTE
3	Receive Data	DCE
4	Request To Send	DTE
5	Clear To Send	DCE
6	Data Set Ready	DCE
7	Signal Ground	
8	Data Carrier Detect	DCE
9	Unassigned	
10	Unassigned	
11	Unassigned	
12	Unassigned	
13	Unassigned	
14	Unassigned	
15	Transmit Clock	DCE
16	Unassigned	
17	Receive Clock	DCE
18	Local Loopback	DTE
19	Unassigned	
20	Data Terminal Ready	DTE
21	Remote Loopback	DTE
22	Unassigned	
23	Unassigned	
24	External Clock	DTE
25	Test Mode	DCE

Table 2-13 DB25 Mini Quad E1 Pin Definition

Pin Number	Signal	Source
1	Transmit Data TIP_Port 1	
2	Receive Data TIP_Port 1	
3	Unassigned	
4	Transmit Data TIP_Port 2	
5	Receive Data TIP_Port 2	
6	Unassigned	
7	Transmit Data TIP_Port 3	
8	Receive Data TIP_Port 3	
9	Unassigned	
10	Transmit Data TIP_Port 4	
11	Receive Data TIP_Port 4	
12	Unassigned	
13	Unassigned	
14	Transmit Data RING_Port 1	
15	Receive Data RING_Port 1	
16	Unassigned	
17	Transmit Data RING_Port 2	
18	Receive Data RING_Port 2	
19	Unassigned	
20	Transmit Data RING_Port 3	
21	Receive Data RING_Port 3	
22	Unassigned	
23	Transmit Data RING_Port 4	
24	Receive Data RING_Port 4	
25	Unassigned	

Table 2-14 Default Software Configuration

Console Port	Fixed
Baud Rate	9600
Data Bit	8
Stop Bit	1
Parity Bit	NONE
XON-XOFF	OFF
Interface	TERMINAL
SNMP	OFF

DTE (V.35/ V.36/ EIA530/ X.21/V.11) Item	Default
RATE	64K
CLOCK	Normal
DATA	Normal
RTS	Activate
TTM	Off
V.54	Off
INTERFACE (Depend on which DTE plug-in card is plugged into the shelf)	V.35, V.36, EIA530/RS449, X.21/V.11

ATM FR T1 Line Items	Default
Frame Format Mode	ESF
Line Code Mode	B8ZS
Line Build Out	0 dB
Yellow Alarm	ON
Alarm Indication Signal	FRAMED
Interface	LONG HAUL

Miscellaneous	Default
Password	LOOP
Device Name	LOOP-AM-3440

ATM FR E1 Line Items	Default
Frame Format Mode	ON
Line Code Mode	HDB3
CRC	ON
RAI	ON
Alarm Indication Signal	FRAMED
CAS	OFF
FDL	OFF
Sa_bit	Sa4
Interface	120 Ohm (Hardware)

Router Setup	Default
Net_Address	000.000.000.000
Netmask	000.000.000.000
Gateway_Address	000.000.000.000
NI_Address	000.000.000.000
Metric	01

3 Operation

3.1 Quick Start for Loop-AM

After installation, the user may want to familiarize him with the equipment immediately. The following abbreviated instructions will give the user a quick start.

3.1.1 Power On

Turn power on by attaching a power cable to the front of the unit.

3.1.2 Load Default

The unit is shipped with factory default setting.

Upon initial power up you will see the following screen on your VT-100 monitor. The AM3440 will automatically load the system hardware configuration stored in the flash memory. If you prefer to load the factory default configuration press the ACO button during the countdown (ie. 3….2…1).

```
';;'
 ;;             ,,,,,       ,,,,,    ,,, ,,,,
 ;;           ,;'   ';,   ,;'   ';,   ;;;'  ';,
 ;;          ,;'     ';, ,;'     ';,  ;;     ';,
 ;;          ;;       ;; ;;       ;;  ;;      ;;
 ;;        , ;;       ;; ;;       ;;  ;;,    ;;
 ;;       ,;  ;;     ;;   ;;     ;;   ;;';,,,'
,;;,,,,,,,;;   ';,,,,'     ';,,,,'    ;;
                                      ;;
                T e l e c o m        ,;;,

Board_Slot=0
Press ACO key to load default configuration...3...2...1...
Init System Configuration.....Load Previous
Test MAP RAM .....OK
Init TSI 90820.....
Redundant board.....
End task ProcHbData......
evRedToPri happened during initialization......
Redundant->Primary takeover !
R-Syc=0,R-Init=1 P=0,S=0000 ChkEr=0000 ErCnt=0000 CmdSycEr=00 HBcnt=0000 [000]
Testing and Init DM9000 - Ethernet controller...OK!
Init SCC1 - HDLC port ...
Init RS485 SCC4...
Trigger all Task...
Enable RS485 and Ethernet ...
Init Master Clock ...
```

3.1.3 Using Front Panel

There is no front panel on the AM3440. A hand-held LCD device is available now and applies to some selective plug-in cards. This device will allow configuration of and access to the various features without the need of a VT100 terminal. More detail, please refer to LCD manual.

Note: Order separately for the hand-held LCD device.

3.1.3.1. Review of Default Settings

All the default settings can be reviewed or changed. This is done by selecting the menu item. Either a sub-menu is shown or the selected setting is indicated with an asterisk.

3.1.3.2. Map Setup

Connect a VT100 terminal to the Console port. Press <o> to logon, then press <s> for system setup. Move the cursor to <c> TSI MAP Setup. The TSI MAP Setup screen shows up.

To change the settings, use arrow keys to select time slot. Press <Tab> to change the port values and enter numbers for the time slot. Press <Esc> to exit the TSI map.

3.1.3.3. DS1

Next, adjust the DS1 settings.

3.1.3.4. Unit Selection

To review or change Slot settings, press <U> Choose a Slot from the main menu.

3.1.4 Using Terminal

To use the RS232 interface to configure the unit, connect a VT-100 terminal to the CONSOLE (button down/ button up) connector using a null modem cable. The VT-100 terminal can be a PC running a VT-100 emulator software.

Upon connection, press ENTER and ESC alternately to bring the main menu into view.

Press O (Log On) to see the full menu.

Press S (System Setup) to review or change the configuration.

3.1.5 Configuration Settings

The entire configuration is shown when S -> System Setup is pressed. To change any setting, use the arrow keys to move to the target setting. Then press the TAB key repeatedly to cycle to the desired setting for any selected parameter.

3.2 System Operation

3.2.1 Date

AM3440 is equipped with a RTC (Real Time Clock). User can change the current date and time as necessary. RTC also can manage leap year. To save RTC battery life, the RTC is activated by the manufacturer just before shipping. The RTC battery has a 10 years power-off life cycle.

3.2.2 Master Clock

This product has a system clock PLL (Phase Lock Loop) which may be phase locked to the DS1 line clock or internal clock. The default master is the DS1 line clock. The default value is “Internal”.

NOTE: If no DS1 line clock is available, Loop-AM will automatically switch to the internal clock source. Loop-AM will automatically switch back to the DS1 line clock when plug-in card plug-in.

3.2.3 Console Port

The console port allows the user either to use a local VT-100 terminal via DB9 connector or use a remote VT-100 terminal via modem for system configuration, diagnostics, polling status reports, etc. The console port baud, data bit length, stop bit length, parity bit length, XON-XOFF flow control, and interface type are as shown below.

Table 3-1 Console Port Setting

Item	Fixed Setting
Baud	9600
Data Length	8-Bits
Stop Bit	1-Bit
Parity Bit	NONE
XON-XOFF	OFF

3.2.4 Menu Lock

The terminal is used to read alarms, system configurations, and system status. It also can be used to change system configurations and clear the alarm queue, etc. By enabling the menu-lock, only read operations are allowed. Modifications to the current status are not allowed. Users may not change system configurations or clear performance data.

- Password and menu-clock options are disabled by default
- The default password is LOOP

3.2.5 Logon, Logoff, and Password

Logoff prevents system configuration changes at the terminal, while logon allows system configuration changes. The password feature is used to augment lock control against unauthorized terminal users from changing system parameters from the terminal. With password enabled, logon requires entering the correct password. If password is disabled, no password is required to logon.

- The default option of the password is disabled.
- The default password is LOOP.

If password is enabled, users must enter the password when logging in to gain the privilege to change system configurations by the terminal. To change the password for the first time, enter the default password when prompted for the old password.

3.3 Alarms and Reports

3.3.1 Alarms

AM3440 has many types of alarm. This includes system to control all of alarm, as listed in Tables below. Also, AM3440 has alarm queue which record the latest 300 alarms with time stamp. Alarm queue support controller switched. AM3440 also has alarm history and alarm status registers which is used to track the alarm count. Each alarm can be individually enabled or disabled. When disabled, no action is taken. When enabled, alarm counter increments on the occurrence of the specific type of alarm. When alarm occurs or the counter threshold exceeds, alarm is triggered.

When alarm is triggered, a relay is activated if it is enabled. Otherwise, no action is taken and only the specific alarm count is incremented. When threshold level is implemented, it is based on the 15 minutes alarm count register.

All alarms are disabled by default. The relay is also disabled by default.

Table 3-2 Alarm Action Table

Alarm Action	Description	Alarm Severity
Alarm	enable or disable all alarm/event (include plug-in card alarm).	Disable/Enable
Relay	enable or disable relay while alarm occurs.	Disable/Manual/Auto
Alarm Cut Off	issue alarm to Management if "alarm cut off" key pressed.	Disable/Enable

Table 3-3 System Alarm Type Table

Alarm Type	Alarm Description	Alarm Severity
Port Inactive	alarm control for: a. slot inactive: pull out plug-in card or plug-in card failed. b. redundant loss: redundant CPU pull out or failed. c. redundant checksum error: checksum error while transmit data from primary to redundant. d. redundant unsync: redundant SW is not same with primary CPU.	Disable/major/minor/critical
Port Start-up	alarm control for: a. slot startup: plug in plug-in card. b. primary startup: first startup CPU card. c. redundant insert: redundant CPU inserted. d. redundant to primary: redundant CPU become to primary if primary CPU loss.	Disable/major/minor/critical
Clock Loss	alarm control for clock loss (line clock or external clock).	Disable/major/minor/critical
Link Switch	alarm control for link switch in e1/t1 protection mechanism.	Disable/major/minor/critical
Map Switch	alarm control for map switch (timing switch) mechanism.	Disable/major/minor/critical
Power Alarm	alarm control for: a. power fail: power plug-in card failed. b. fan fail: fan failed. c. power consumption: power over load.	Disable/major/minor/critical
Type Mismatch	alarm control for: a. plug-in card type mismatch: if plug in plug-in card different with previous record. b. link change: if link ID different with previous record.	Disable/major/minor/critical

Note:
disable: no alarm issue.
major: issue major alarm and enable major relay (if enabled).
minor: issue minor alarm and enable miner relay (if enabled).
critical: issue critical alarm and enable major relay (if enabled).

Table 3-4 DTE-PORT Alarm Type Table

Alarm Type		Alarm Description	Threshold
V.35	"slot-m DTE#n UNSYNC"	RTS Loss, V.35-interface (slot number = m; port number = n, n=1-6)	no

Table 3-5 Alarm Type Numbers

Unit	Alarm Type	Alarm Description	Alarm Type Number
Controller	Alarm cut off		0
	Slot no work		1
	Slot start		2
	Clock loss		3
	Primary start		4
	Redundant loss		5
	Backup switch		6
	Power failure		7
	Redundant checksum error		8
	Fan failure		9
	TSI map switch		10
	LINK_PROTECTION_ALARM		11
	REDUNDANT_INSERT_ALARM		12
	REDUNDANT_UNSYNC_ALARM		13
	REDUNDANT_TO_PRIMARY_ALARM		14
	PLUG-IN CARD_TYPE_MISMATCH_ALARM		15
	LINK_ID_MISMATCH_ALARM		16
	POWER_CONSUMPTION_ALARM		17
	SSM_CLOCK_SWITCH_ALARM		18
E1 card	RAI	Remote Alarm Indication	21
	AIS	Alarm Indication Signal	22
	LOS	Loss of Signal	23
	LOF	Loss of Frame	24
	BPV	Bipolar Violation	25
	ES	Error Second	26
	UAS	Unavailable Second	27
	CSS	Control Slip Second	28
T1 card	YEL	Yellow Alarm	21
	AIS	Alarm Indication Signal	22
	LOS	Loss of Signal	23
	LOF	Loss of Frame	24
	BPV	Bipolar Violation	25
	ES	Error Second	26
	UAS	Unavailable Second	27
	CSS	Control Slip Second	28

Note: If Redundant Loss and Redundant Insert are a pair, the alarm condition will be cleared when Redundant Insert occurs after Redundant Loss. If Slot no work and Slot start are a pair, the alarm condition will be cleared when Slot start occurs after Slot no work.

Unit	Alarm Type	Alarm Description	Alarm Type Number
DTE cards (V.35/ V.36/ X.21/V.11/ EIA530)	UNSYNC	Un-synchronous	20
ATM Frame Relay E1/T1 card	RAI or YEL	Remote Alarm Indication or Yellow Alarm	21
	AIS	Alarm Indication Signal	22
	LOS	Loss of Signal	23
	LOF	Loss of Frame	24
	BPV	Bipolar Violation	25
	ES	Error Second	26
	UAS	Unavailable Second	27
	CSS	Control Slip Second	28
	ATM LOS	Loss of Signal	29
	ATM AIS	Alarm Indication Signal	30
	ATM RDI	ATM Remote Defect Indication	31
	ATM LOC	ATM Loss of Continuity	32
	FR LKD	Frame Relay Link Down	33

3.3.2 Reports

For DS1 line receiver, AM3440 has three sets of performance registers. These are line, user, and far-end. The line performance register tracks the DS1 line receiver performance status. The user performance register tracks the DS1 line receiver as well, but user may clear at any time. The far-end performance register tracks the far-end DS1 receiver status. The performance parameters are listed in Table below. User performance register have an additional parameter, CSS (controlled slip second).

Each performance parameter has ninety six sets of registers to record 24 hours history in 15 minute intervals.

Table 3-6 Performance Parameter List

Performance Parameter	Description	Definition 2 Frame/Multiframe	Definition 16 Frame/Multiframe
ES	Error Second	BPV≥1, OOF≥1, or CS≥1.	CRC6 ERROR ≥ 1, OOF ≥1, or CS ≥1.
BES	Bursty Error Second	1 < BPV < 2048	1 < CRC6 < 860
SES	Severe Error Second	BPV ≥ 2048, or OOF ≥ 1	CRC6 ≥ 860, or OOF ≥ 1
DM	Degraded Minute	BPV≥ 123	CRC6 ≥ 47
LOFC	Loss Of Frame Count	OOF for 2.5 ± 0.5 sec	OOF for 2.5 ± 0.5 sec
UAS	Unavailable Second	≥ 10 consecutive SES	≥ 10 consecutive SES
CSS	Controlled Slip Second	frame slip ≥ 1	frame slip ≥ 1

Table lists below the types of reports available, performance parameters provided by each report, and the reset commands for each report.

Table 3-7 Performance Report Options

Report Type [Menu Command]	Category	Report					
		ES	UAS	BES	SES	CSS	LOFC
Front Panel Reports	USER [Network]	Y	Y	Y	Y	Y	Y
1-Hour Terminal Reports Menu Option [1]	USER [Network]	Y	Y	Y	Y	Y	Y
	LINE [Network]	N/C	N/C	N/C	N/C	N/C	N/C
	FAR-END	N/C	N/C	N/C	N/C	N/C	N/C
24-Hour Terminal Reports Menu Option [2]	USER [Network]	Y	Y	Y	Y	Y	Y
	LINE [Network]	N/C	N/C	N/C	N/C	N/C	N/C
	FAR-END	N/C	N/C	N/C	N/C	N/C	N/C
CRC Error Count Terminal Reports Menu Option [E]	USER [Network]	—	—	—	—	—	—
	LINE [Network]	—	—	—	—	—	—
	FAR-END	—	—	—	—	—	—

Y = Report available and can be cleared by admin terminal command "Y".

N/C = No clear. Report available, but counts cannot be cleared by the user.

– = Report not available.

3.4 LED Operation

The front of the AM3440 has LEDs for operation and error indications. The indication can be in one or more colors. Note that when powering up and self test is in progress, the unit front panel LEDs are also used to indicate fault conditions.

Table 3-8 Front-Panel LED Table (DS1, DTE, ATM/FR)

LED		Color	Indication
POWER		Off Green	Power off Power on and operational
CPU	**Primary CPU**		
	Power	Off Green	Power off Power on and operational
	Active	Off Flashing Green	CPU fails Normal
	Alarm	Off Red	Normal or alarm disable Alarm
	Redundant CPU		
	Power	Off Flashing Green	Power off Power on and act as redundant CPU.
	Active	Off	Normal
	Alarm	Off Red ➔ Off Red	Normal Redundant CPU board is synchronizing to primary CPU board. ➔ The synchronization is done. Redundant version is different with Primary
	NOTE: Active led is used to identify primary CPU. If the color of Active led is flashing green, then this CPU is primary.		
E1 / T1	SYNC/TEST	Off Green Flash Green	Not existed DS1 line frame in sync DS1 line is under testing
	LOF	Off Red	Normal Loss of Frame (LOF) or Loss of Signal (LOS)
	BPV	Off	BPV Led is not functional
	RAI/AIS	Off Amber Flashing Amber	Normal Receive remote alarm indication from DS1 line Receive alarm indication signal from DS1 line
Mini 4 E1 / T1	(4 LEDs)	Off	No signal or port not equipped
		Green	Normal, 4E1/ T1 interface in sync In master mode (as protection function is enable)
		Flashing Green	4E1/ T1 interface loopback test in progress
		Red Flashing Red Flashing Green slowly	Alarm, 4E1/ T1 interface is unsync Receive RAI In slave mode (as protection function is enable)
DTE	DTE port- V.35/ V.36/ EIA530/ X.21/V.11	Flashing Green Green Flashing Green regularly RED	Transmit/ Receive data present Normal Loopback Test Alarm
ATM/FR		Green Flash Green Red Amber Flashing Amber	E1/ T1 line frame in sync E1/ T1 line is under testing Loss of Frame (LOF) or Loss of Signal (LOS) Receive yellow alarm from E1/ T1 line Receive alarm indication signal (AIS) from E1/ T1 line

3.5 Telnet Connectivity

To manage the system from internet, Loop-AM controller offers Telnet connectivity and SSH (Secure Shell) to allow user access to the Loop-AM controller from any workstation in the network. SSH (Secure Shell) is a network protocol that allows data to be exchanged over a secure channel between two computers. Encryption provides confidentiality and integrity of data. SSH uses public-key cryptography to authenticate the remote computer and allow the remote computer to authenticate the user, if necessary.

There are two interfaces for Telnet function, one is Ethernet port, and the other is in-band port (in-band management). To use Ethernet interface, use Ethernet/RJ45 port at back panel to connect with Ethernet network directly. Ethernet and in band port cannot be used at the same time.

To use the Telnet function, make sure IP Address, and Interface parameters are matched.

Once the IP parameters are set, users can verify that the AM3440 is operating properly by using the ping command to check for a response from AM3440:

```
$ping 192.1.100.45
192.1.100.45 is active
```

The Telnet utility simulates VT-100 to connect with the AM3440 controller. The controller main menu of terminal screen described at Chapter 6 will be displayed after Telnet connection is established. Refer to Chapter 6 to manage AM3440 controller. AM3440 controller can maintain 4 Telnet connections simultaneously but only one to log-on at one time.

3.6 Embedded SNMP Agent

The embedded SNMP agent for AM3440 offers standard RFC 1213 MIB II and RFC 1406 DS1 MIB as well as Loop Telecom's enterprise MIB. Network manager can use any SNMP compatible network management system such as Hewlett-Packard's HP Open View to monitor and control AM3440.

Please refer to each respective SNMP manager operation instruction to incorporate the AM3440 enterprise MIB to the system.

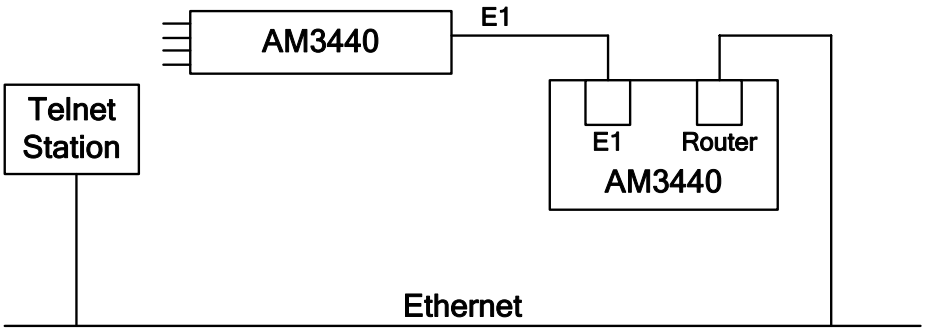

Figure 3-1 HDLC using E1 router

3.7 In-Band Management Setup

In addition to the console port and the Ethernet port, AM3440 can also allow remote management through a 64 Kbps time slot from the network line. To achieve remote management using this “in-band” technique, two steps are necessary.

First, the Ethernet connection of the remote management terminal must be inserted to a designated time slot in the network. This time slot can be a DS0 channel in a E1 or T1 line, or a DS0 channel in any of the broadband facilities, such as E3, DS3, STM1, or OC3. This can be achieved though a router-CSU/DSU-mux series of equipment or in one step through a router interface on a AM3440.

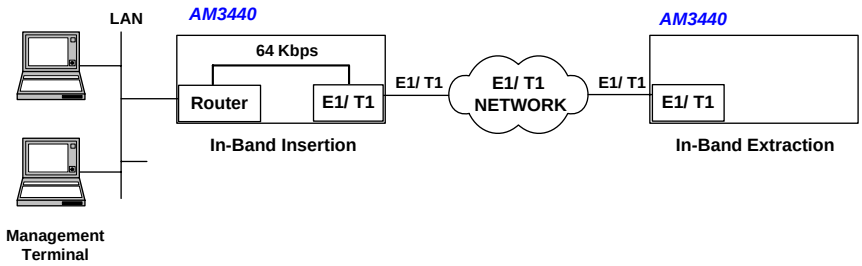

Next, the equipment to be management, namely this AM3440 must extract this 64 Kbps time slot to the management port. This is accomplished through the TSI screen.

Note: Please refer to Appendix B Inband Management for detail.

Table 3-9 Error Message Table

The error messages defined here should be corresponded to the error codes.

Error Code	Error Description
ERROR01	A loopback is in effect
ERROR02	LCD operation is locked
ERROR03	Channel is already in use
ERROR04	can't be in TTM if MCLK=DTE
ERROR05	DTEn is in TTM or speed is 0
ERROR06	Line unsync
ERROR07	No channel is assigned
ERROR08	Please select speed first
ERROR09	A test is in progress
ERROR10	DTE loopback is in progress
ERROR11	Please reduce speed first
ERROR12	Illegal Date/Time format
ERROR13	the DTE1 channel should be B2
ERROR14	the DTE1 channel should be B1+B2
ERROR15	the DTE1 channel should be B1
ERROR16	the DTE1 channel should be B1/B2
ERROR17	Remote doesn't have this function
ERROR18	Remote unit rejected this request
ERROR19	Remote unit didn’t respond
ERROR20	Remote DTE1 TTM should be off
ERROR21	the DTE1 channel should be IDLE
ERROR22	the DTE1 is not installed
ERROR23	undefined response
ERROR24	the unit didn't response
ERROR25	speed can't be zero if MCLK=DTEn
ERROR26	the unit is not installed
ERROR27	ESF or ESF&T1.403 mode is required
ERROR28	ESF&T1.403 mode is required
ERROR29	E1 CRC and FDL must set to be on
ERROR30	LLB or LOCAL LOOPBACK activated
ERROR31	EOC is not ready
ERROR32	Current slot is not HDSL plug-in card
ERROR33	Current slot is not DTE plug-in card
ERROR34	Not enough channels
ERROR35	Slot need to download firmware
ERROR36	Time slot conflict
ERROR37	Reserved for future use
ERROR38	Reserved for future use
ERROR39	Reserved for future use
ERROR40	Reserved for future use
ERROR41	Reserved for future use

4 Maintenance

4.1 Self-Test

When Loop-AM is powered up, a complete self-test routine is run to check all I/O ports, read/write memory, and data paths to validate system integrity.

4.2 Diagnostics

Diagnostics for AM3440 covers Loopback and Test Pattern. Generally, the Loopback functions might be very in different type of plug-in cards. Please go to individual plug-in card manual for detail info.

4.3 Near End Loopback

The near end loopbacks such as local loopback, line loopback, payload loopback, DTE loopback, are activated by the AM3440. The loopbacks are at the near end facility.

NOTE: Deactivate the near-end loopbacks from the terminal, depending on where it was activated.

4.4 Far End Loopback

Far-end loopbacks (remote line loopback, remote payload loopback, remote channel loopback, and DTE loopback) can be activated by the local AM3440 to cause a remote loopback commands to the far-end facility.

4.5 Test Pattern

To test the DS1 line, four test patterns are available to determine faults such as deficient clock recovery, fault ALBO level recovery, inadequate jitter margin, presence of bridge taps, and mis-optioned network interface. These four patterns are framed pattern with proper DS1 frame pattern as described in the following paragraph.

4.6 Verifying Loop-AM Operations

The purpose of this section is not to help the user determine where a possible fault in the network may lie. For this, the user needs to know the exact geometry of the network. Then standard network trouble shooting procedures should be followed, which involve sectionalizing the network and performing loopback tests on pieces of the network.

The purpose here is to help the user determine whether the AM3440 equipment is at fault after tests have pointed a suspicious finger at this equipment. The procedures outlined here depend on test equipment and other equipment the user may have on hand.

The organization of these procedures starts from the simple to the complex. The procedure ends when a definitive conclusion is made that the AM3440 equipment is at fault. To verify that the AM3440 equipment is not at fault, specialized equipment such as a BERT (bit error rate test) set is needed.

4.6.1 Quick Test

4.6.1.1. LCD/Display

LCD is currently available.

4.6.1.2. Independent Test

Remove all line and interface connections to AM3440. Remove power. After a few seconds, re-apply power. Observe the power-AMp self-test sequence. If this fails, then Loop-AM has failed. See if the LEDs show any abnormal displays. If yes, use the LED indications to guide the user to test other parts of the network, such as the E1 line, or interface plug-in.
Especially during initial installation, excessive errors may be due to (a) incorrect configuration of either Loop-AM or of the equipment at the other end of the line, or (b) due to faulty line installation, which results in excessive noise, cross talk, or impedance mismatch. Especially in electrically noisy environments, such as central offices, use of shielded cables is mandatory.

4.6.2 Substitution

If a spare AM3440 plug-in is available, then replace the working one with the spare. The user must carefully configure the spare exactly as the working one. If the substitution clears the problem, then the original working one is suspect. Note that this is not definitive as other reasons may cause the same symptom. A good practice is to reconfigure the original one and swap once more.
If both units behave the same, then the problem is probably elsewhere.

4.6.3 Using Loopback Plugs

Without a spare, loopback plugs are handy for diagnosis. Note that internal loopback facilities of the AM3440 do not include the interface circuitry. Thus a set of plugs, one for each of the interfaces, line and DTE, are needed for complete tests. These plugs are wired such that signals from the Loop-AM are loopback by hard wire back to the receive pin of the same plug.

Replace the line connector with a loopback plug. Observe if the line is in sync. If not then AM3440 has failed. Then perform a BERT test towards the line. If this fails, then AM3440 has failed.

For the DTE interfaces, a loopback plug must be used in concert with a far end AM3440 if such a terminal is available, then a PRBS test will determine if that DTE interface is at fault.

Note that if a far end terminal is available, the first test should be a local line loopback to see if the line is good. If tests with loopback plug all pass, then the problem is probably elsewhere.

4.6.4 Using Bert Test Set

If a BERT (bit error rate test) set and another AM3440 are available, such as the Fireberd 6000, then a comprehensive suite of test are available to examine the health of the Loop-AM. If another AM3440 is not available, use of the loopback plugs would provide some of the tests otherwise possible.
With a BERT, each of the ports of the AM3440 can be tested individually. The user must configure the BERT in the exact way the AM3440 is configured. This is easily done by comparing each of the options one by one. After checking that the configuration matches, if any one of the ports fails, then AM3440 has failed.

5 Front Panel Operation

5.1 Refer to AM3440-A LCD separate Manual

For detail of AM3440-A LCD chapter, please see AM3440-A LCD separate Manual.

6 Terminal Operation

AM3440 provides comprehensive report and enhanced configuration capability through the console port on the front panel. Using single-character commands and arrow keys, the AM3440, including all of its ports, can be configured and monitored through the use of a VT-100 terminal. The single-character commands are not case sensitive. On each screen, the available commands and the configurable fields are highlighted.

When a VT-100 terminal is connected to the CONSOLE of front panel, make sure the button is up, upon power up, a main menu is shown. The main menu consists of three groups of commands, Display, Log, Setup, and MISC. Initially only Display and Access commands are available. To enable Setup and MISC, user has to log on using the "O" command, after which the full screen is shown.

```
LOOP AM3440-A              === Controller Menu ===         17:14:50 08/03/2011

Serial Number   : 172921                Redundant Controller: Disabled
Hardware Version: Ver.J                 Start Time  : 11:19:23 08/03/2011
Software Version: V8.18.01 08/02/2011   Device Name: LOOP AM3440-A



[DISPLAY]                               [SETUP]
C -> System Configuration               S -> System Setup
B -> Clock source Configuration         M -> System Alarm Setup
Q -> Alarm Queue Summary                W -> Firmware Transfer
I -> Information Summary                V -> Store/Retrieve Configuration
R -> Redundant CTRL Information         K -> Clock source Setup
P -> Performance Report                 T -> Bit Error Rate Test

[LOG]                                   [MISC]
U -> Choose a Slot                      A -> Alarm Cut Off
F -> Log Off [SETUP],[MISC] Menu        X -> Clear Alarm Queue
O -> Log On  [SETUP],[MISC] Menu        Y -> Controller Return to Default
                                        Z -> Controller Reset


>>SPACE bar to refresh or enter a command ===>
```

If the password option is turned on, a prompt asking for password is shown.

```
==>> Enter password : xxxx
```

With the password option is turned on, only after a valid password is entered, the full menu is shown, otherwise user is asked to enter the correct password again.

```
>>Invalid input of password ! Try again ?[Y/N]
```

If password is correctly entered, or if the password option is OFF, the full controller main menu is shown. Otherwise, only display menu items will be shown, which are in the lower left half of the screen.

6.1 Menu Tree

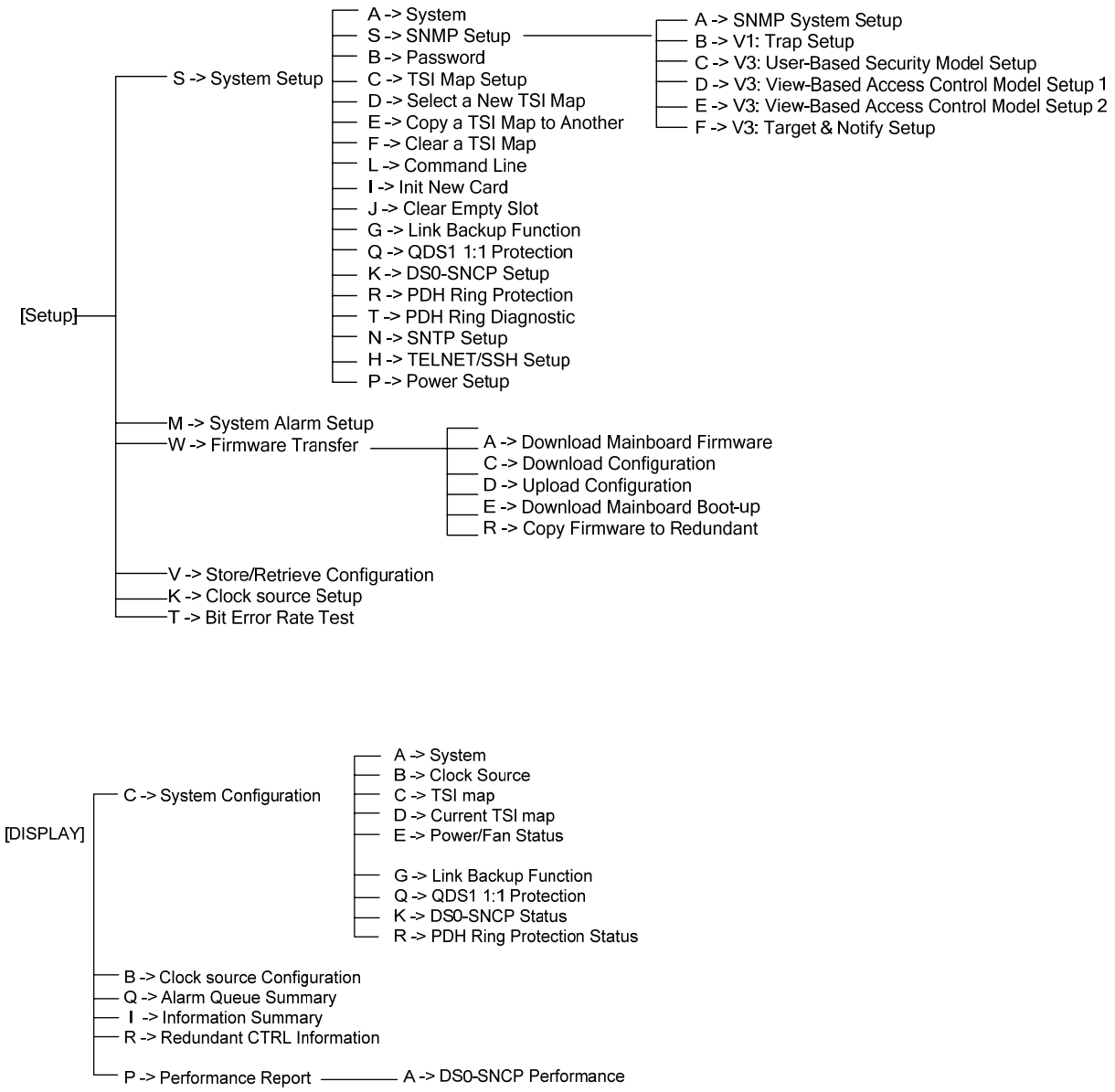

Figure 6-1 AM3440 Controller: Menu Tree

Note: “PDH Ring Protection” and “PDH Ring Diagnostic” are optional functions. To access theses two optional functions, you must order the PDH Ring software separately, or these two functions will not show on the VT100 menu.

6.2 Main Menu

If the terminal screen is illegible, press the "Enter" and "Esc" key alternatively to bring up the main menu. This is particularly needed if the terminal is connected to the controller while the power is already applied. If the main menu still fails to appear, check to see that the terminal is configured as 9600, 8, n, 1, and that a proper null modem or a null modem cable is used.

```
LOOP AM3440-A              === Controller Menu ===         17:14:50 08/03/2011

Serial Number   : 172921                Redundant Controller: Disabled
Hardware Version: Ver.J                 Start Time  : 11:19:23 08/03/2011
Software Version: V8.18.01 08/02/2011   Device Name: LOOP AM3440-A



[DISPLAY]                               [SETUP]
C -> System Configuration               S -> System Setup
B -> Clock source Configuration         M -> System Alarm Setup
Q -> Alarm Queue Summary                W -> Firmware Transfer
I -> Information Summary                V -> Store/Retrieve Configuration
R -> Redundant CTRL Information         K -> Clock source Setup
P -> Performance Report                 T -> Bit Error Rate Test

[LOG]                                   [MISC]
U -> Choose a Slot                      A -> Alarm Cut Off
F -> Log Off [SETUP],[MISC] Menu        X -> Clear Alarm Queue
O -> Log On  [SETUP],[MISC] Menu        Y -> Controller Return to Default
                                        Z -> Controller Reset


>>SPACE bar to refresh or enter a command ===>
```

6.2.1 Controller Configuration

Press “C” from the Controller Menu, the screen of System Configuration will show as below.

```
LOOP AM3440-A          === Controller Configuration ===    13:40:00 04/29/2011



                          A -> System
                          B -> Clock Source
                          C -> TSI map
                          D -> Current TSI map
                          E -> Power/Fan Status

                          G -> Link Backup Function
                          Q -> QDS1 1:1 Protection
                          K -> DS0-SNCP Status
                          R -> PDH Ring Protection Status









<< Press ESC key to return to Main Menu or enter a command >>
```

Note: “PDH Ring Protection Status” only available when the “PDH Ring” software has purchased. You must order the PDH Ring software separately, or these related functions will not show on the VT100 menu.

6.2.1.1. System

Controller Menu > (C) System Configuration > (A) System

The System Configuration shows the current status of device name, network, console port, TSI map, and clock

```
LOOP AM3440-A            === System Configuration ===      17:17:45 08/03/2011

[System]
Device Name  : LOOP AM3440-A

[Network]
NI   EN  IPAddress       SubnetMask      Frame      LB Timer
LAN : ON 010.003.023.095 255.255.000.000 Ethernet
WAN :OFF 010.004.001.001 255.255.255.000 HDLC        1
Gateway Interface: LAN   Gateway IPAddr: 000.000.000.000
Inband Uses Slot: D
[CONSOLE port]
Baud Rate    : 9600
Data Length  : 8-Bits
Stop Bit     : 1-Bit
Parity       : NONE
XON_XOFF     : XOFF

[TSI map]                                [Clock]
TSI Function   : 1:1(Bidirection)        Clock Mode   : Normal
Idle Signalling: 1010


<< ESC key to return to previous menu, SPACE bar to refresh >>
```

Note: NI = Network Interface, EN = Enable (DIS=Disable), LB Timer = Loopback Timer
Clock Mode: Normal and SSM (Synchronous Status Message)

6.2.1.2. Clock Source

Controller Menu > (C) System Configuration > (B) Clock Source

The screen of Clock Source Setup will show as below. Note that the external clock type in this example is E1.

```
LOOP AM3440-A      == Clock Source Setup (Normal Mode) === 17:18:20 08/03/2011



Master_Clk Source : INTERNAL             Clock Hold-Over: OFF
Second_Clk Source : INTERNAL             Hold-Over State: Normal
Current Clock     : MASTER_CLK           Frame Pulse Period: 8001.2 Hz
Clk_Recover_Mode  : MANUAL
Clock Status      : NORMAL
Ext. Clock Type   : E1(75ohm)
Dual External Clock Protection : Disable




<< ESC key to return to previous menu, SPACE bar to refresh >>
```

Note:

1. Clock Hold-Over option is for 3E1 plug-in card only.
2. When the option of Clock Hold-Over is ON and the current clock is MASTER_CLK, the Hold-Over State in the screen will show “NORMAL”. When clock source loss occurs, the Hold-Over State in the screen will show “Hold-Over”.
3. Make sure the external clock type corresponds to the physical card type. If the system is linked to T1 but the “Ext. Clock Type” is set to E1, setup failure may occur.

The sample screen below shows a T1 clock type.

```
LOOP AM3440-A              === Clock Source Setup ===       19:07:29 03/01/2001



Master_Clk Source : SLOT_A
Second_Clk Source : SLOT_D
Current Clock     : INTERNAL
Clk_Recover_Mode  : MANUAL
Clock Status      : NORMAL
Ext. Clock Type   : T1









<< ESC key to return to previous menu, SPACE bar to refresh >>
```

6.2.1.3. TSI Map

Controller Menu > (C) System Configuration > (C) TSI Map

The TSI Map shows the map configuration status for all map, slots and ports.

The sample screen shows Map 1 Slot A Single E1 current map configuration status. It indicates Slot A Timeslot (TS) 5 to 9 mapping to Slot 9 Port 1 Timeslot (TS) 5 to 9.

```
  LOOP AM3440-A        === System Configuration (Map) ===   16:29:05 07/29/2011
ARROW KEYS: CURSOR MOVE, TAB: ROLL OPTIONS
Map  Number:MAP_1

Slot Number: A   E1          PO/TS D SL/PO TS   PO/TS D SL/PO TS
Port Number:     NON-CAS     ===== ==========   ===== ==========
                                 1 d                17 d
                                 2 d                18 d
                                 3 d                19 d
                                 4 d                20 d
                                 5 d  9  1  5       21 d
                                 6 d  9  1  6       22 d
                                 7 d  9  1  7       23 d
                                 8 d  9  1  8       24 d
                                 9 d  9  1  9       25 d
                                10 d                26 d
                                11 d                27 d
                                12 d                28 d
                                13 d                29 d
                                14 d                30 d
                                15 d                31 d
                                16 d

<< Press ESC to return to previous menu >>
```

Another example shows Slot C with no plug-in card.

```
LOOP AM3440-A            === System Configuration (Map) ===   14:45:22 08/02/2011
ARROW KEYS: CURSOR MOVE, TAB: ROLL OPTIONS
Map  Number:MAP_1

Slot Number: C               PO/TS D SL/PO TS   PO/TS D SL/PO TS
Port Number:                 ===== ==========   ===== ==========




<< Press ESC to return to previous menu >>
```

6.2.1.4. Current TSI Map

Controller Menu > (C) System Configuration > (D) Current TSI Map
The screen of Current TSI Map will show as below. The sample screen shows Slot A Single E1 current map configuration status. It indicates Slot A Timeslot (TS) 5 to 9 mapping to Slot 9 Port 1 Timeslot (TS) 5 to 9.

```
LOOP AM3440-A      === System Configuration (Current Map) ==16:19:54 10/01/2003

Current Map

Slot Number:11    Quad-E1 PO/TS D SL/PO TS PO/TS D SL/PO TS
Port Number:P3   NON-CAS     == ========== ===== ==========
                           3  1 d  D     1  3 17 d  D    17
                           3  2 d  D     2  3 18 d  D    18
                           3  3 d  D     3  3 19 d  D    19
                           3  4 d  D     4  3 20 d  D    20
                           3  5 d  D     5  3 21 d  D    21
                           3  6 d  D     6  3 22 d  D    22
                           3  7 d  D     7  3 23 d  D    23
                           3  8 d  D     8  3 24 d  D    24
                           3  9 d  D     9  3 25 d  D    25
                           3 10 d  D    10  3 26 d  D    26
                           3 11 d  D    11  3 27 d  D    27
                           3 12 d  D    12  3 28 d  D    28
                           3 13 d  D    13  3 29 d  D    29
                           3 14 d  D    14  3 30 d  D    30
                           3 15 d  D    15  3 31 d  D    31
                           3 16 d  D    16

<< Press ESC to return to previous menu >>
```

Note: D displays either d/v (data/voice)

Another example of Slot 9 Quad E1 current map configuration status. It indicates Slot 9 Quad E1 Port 1 Timeslot 5 to 9 mapping to Slot A Time Slot 5 to 9.

```
LOOP AM3440-A      === System Configuration (Current Map) ==16:16:02 07/29/2011
ARROW KEYS: CURSOR MOVE, TAB: ROLL OPTIONS
Current Map

Slot Number: 9    Quad-E1     PO/TS D SL/PO TS   PO/TS D SL/PO TS
Port Number:P1    NON-CAS     ===== ==========   ===== ==========
                                  1 d                17 d
                                  2 d                18 d
                                  3 d                19 d
                                  4 d                20 d
                               1  5 d  A      5      21 d
                               1  6 d  A      6      22 d
                               1  7 d  A      7      23 d
                               1  8 d  A      8      24 d
                               1  9 d  A      9      25 d
                                 10 d                26 d
                                 11 d                27 d
                                 12 d                28 d
                                 13 d                29 d
                                 14 d                30 d
                                 15 d                31 d
                                 16 d

<< Press ESC to return to previous menu >>
```

6.2.1.5. Power/Fan Status

Controller Menu > (C) System Configuration > (E) Power/Fan Status
It shows the current status of power1, power2, total power consumption, fan1 and fan2.

```
LOOP AM3440-A              === Power/Fan Status ===        17:28:09 08/03/2011

Power 1 Status : -48V 100W DC
Power 2 Status : N/A
Total (Maximum) power consumption (Estimation) : 26W

Fan 1 Status : Good
Fan 2 Status : Good





<< ESC key to return to previous menu, SPACE bar to refresh >>
```

```
LOOP AM3440-A              === Power/Fan Status ===        17:28:09 08/03/2011

Power 1 Status : -48V 100W DC
Power 2 Status : N/A

Total (Maximum) power consumption (Estimation) : 26W

Fan 1 Status : Fail or not exist
Fan 2 Status : Fail or not exist





<< ESC key to return to previous menu, SPACE bar to refresh >>
```

Note: Power consumption table shows below to estimate total power consumption and detect power plug-in card status. Power consumption does not include –48V DC power supply consumption.

Table 6-1 Power consumption

Condition		Alarm Trap	Warning message
Total Power Consumption	**DC Power Supplies**		
>= 75W & No FAN or FAN Failure	Any	External fan tray is necessary	Please add a fan tray.
>= 90W	Single 100W	Power supplies over loading	Please remove plugged-in plug-in cards or upgrade to 150W power supplies.
	Dual 100W	Power protection not supported	
	100W + 150W	Power protection not supported	
	Dual 150W	Normal	
>= 135W	Single 150W	Power supplies over loading	Please remove plugged-in cads or upgrade
	100W + 150W	Power protection not supported	
	Dual 150W	Power protection not supported	

6.2.1.6. Link backup function

Controller Menu > (C) System Configuration > (G) Link backup function
This link backup function only apply to single E1/T1 (mini slot), single FOM (mini slot), and 1FOMA (single slot).

Below sample is to display the link backup function is on and the mode is non-revertible. The link backup function of FE1 card (single E1) is Link-A and Link-B as backup link, and FOM card (mini slot) is Link-C and Link-D as backup link.

NOTE:
Configuration for link backup will not be changed if the user turns on the backup function without selecting the backup link type, or turns off the backup function without clearing the backup link type.

```
LOOP AM3440-A        === System Configuration (Backup) ===  17:30:31 08/03/2011

Backup function  :  ON
Mode             :  non-revertible

Link        : Link-A  Link-B  Link-C  Link-D  Link-1  Link-2  Link-3  Link-4
Model       : FE1     FE1     FOM     FOM     QuadE1                    QuadE1
===========   ==========================================================
Backup Link : Link-B  ------  Link-D  ------  ------  ------  ------  ------
Backup Fun  : ON      ON      ON      ON      OFF     OFF     OFF     OFF
Link Status : Work    Idle    Work    Idle    Normal  Normal  Normal  Normal


Link        : Link-5  Link-6  Link-7  Link-8  Link-9  Link10  Link11  Link12
Model       :                                 QuadE1  QuadE1
===========   ==========================================================
Backup Link : ------  ------  ------  ------  ------  ------  ------  ------
Backup Fun  : OFF     OFF     OFF     OFF     OFF     OFF     OFF     OFF
Link Status : Normal  Normal  Normal  Normal  Normal  Normal  Normal  Normal

<< Press ESC key to return to previous menu >>
```

6.2.1.7. QDS1 1:1 protection

Controller Menu > (C) System Configuration > (G) Link backup function
This function displays the current QDS1 1:1 protection status. Below sample shows the port 1 and port 2 of slot 9: 10 as circuit protection.

```
LOOP AM3440-A         === QDS1 1:1 Protection ===       18:28:09 07/29/2011
ARROW KEYS: CURSOR MOVE, TAB: ROLL OPTIONS
Protect Pair(Master:Backup)    Port 1       Port 2       Port 3       Port 4
==========================  ===========  ===========  ===========  ===========
Slot A :B  (   FE1:      )   -----------  -----------  -----------  -----------
Slot C :D  (      :FE1   )   -----------  -----------  -----------  -----------
Slot 1 :2  (   FOM:FOM   )   -----------  -----------  -----------  -----------
Slot 3 :4  (      :      )   -----------  -----------  -----------  -----------
Slot 5 :6  (      :      )   -----------  -----------  -----------  -----------
Slot 7 :8  (      :      )   -----------  -----------  -----------  -----------
Slot 9 :10 (QuadE1:QuadE1)   CIRCUIT      CIRCUIT      DISABLE      DISABLE
Slot 11:12 (      :      )   -----------  -----------  -----------  -----------

Protection Working Port        Port 1       Port 2       Port 3       Port 4
Slot A :B  (   FE1:      )
Slot C :D  (      :FE1   )
Slot 1 :2  (   FOM:FOM   )
Slot 3 :4  (      :      )
Slot 5 :6  (      :      )
Slot 7 :8  (      :      )
Slot 9 :10 (QuadE1:QuadE1)   9 -1         10-2
Slot 11:12 (      :      )

<< Press ESC key to return to previous menu >>
```

Note: The highlight on 9-1 means slot 9 port 1 as protection working port.

6.2.1.8. DS0-SNCP Status

Controller Menu > (C) System Configuration > (K) DS0-SNCP Status

This function is to view the current status of DS0-SNCP.

```
LOOP AM3440-A              === DS0-SNCP Status ===         13:40:31 04/29/2011

DS0-SNCP : ENABLE                       Total DS0-SNCP: 1

Index Protected        Primary          Secondary       d/v  Mode
      Slot Port TS     Slot Port TS     Slot Port TS
==============================================================================
   1   6    1   01    W10    1   01     11    1   01     D   Non-revertible
```

Note: d/v means data or voice mode

6.2.2 Clock Source Configuration

Controller Menu > (B) Clock source Configuration

This function shows the current clock source configuration info.

```
LOOP AM3440-A      == Clock Source Setup (Normal Mode) === 18:19:18 08/03/2011



Master_Clk Source : INTERNAL              Clock Hold-Over: OTF
Second_Clk Source : INTERNAL              Hold-Over State: Normal
Current Clock     : MASTER_CLK            Frame Pulse Period: 8001.2 Hz
Clk_Recover_Mode  : MANUAL
Clock Status      : NORMAL
Ext. Clock Type   : E1(75ohm)
Dual External Clock Protection : Disable









<< ESC key to return to previous menu, SPACE bar to refresh >>
```

6.2.3 Alarm Queue Summary

Controller Menu > (Q) Alarm Queue Summary

This function is to view the Alarm Queue Summary.

```
LOOP AM3440-A            === Alarm Queue Summary ===       18:21:00 08/03/2011
  1 -- Controller: SLOT 9  STARTUP---------19:03:10 03/01/2001
  2 -- Controller: PRIMARY START-UP--------19:03:07 03/01/2001









<< SPACE bar to refresh or ESC key return to main menu >>
```

6.2.4 Information Summary

Controller Menu > (I) Information Summary

This function displays the current information of all plug-in cards.

The "**unplugged**" means the registered card has been unplugged. To clear the "unplugged" wording from the screen, go to Controller Menu > (S) System > (J) Clear Empty Slot and select the slot you want to clear.

The "**mismatch**" means the slot has replaced by another type of card which is different from registered card type. When the word of mismatch show up, press "S" command from the controller menu, then enter "I" command in the screen of "Controller Setup" in order to init a new plug-in card.

```
LOOP AM3440-A            === Information Summary ===       18:22:53 08/03/2011

Slot Card/Interface     Serial   Software Version    Registered Card
==== ================   ======  ===================  ===============
 A   FE1 120ohm         N/A     V4.02.05 12/17/2010  FE1
 B                                                   FE1             unplugged
 C
 D   FE1 120ohm         N/A     V3.05.01 09/21/2007  FE1

==== ================   ======  ===================  ===============
 1   FOM                N/A                          FOM
 2   Quad E1                    V3.test2 06/17/2011  FOM             mismatch
 3
 4
 5
 6
 7
 8
 9   Quad E1            010595  V3.test2 06/17/2011  Quad E1
 10                                                  Quad E1         unplugged
 11
 12

<< ESC key to return to previous menu, SPACE bar to refresh >>
```

6.2.5 Redundant CTRL Information

Controller Menu > (R) Redundant CTRL Information

This function displays the redundant CTRL info : the serial number, hardware and software version of the redundant CPU.

```
LOOP AM3440-A        === Redundant Board Information ===   09:47:31 10/09/2009

Serial Number   : 123542
Hardware Version: Ver.J
Software Version: V8.05.01 09/29/2009
```

If there is no redundant CTRL card, press "R" will show Redundant Board does not exist!

```
LOOP AM3440-A              === Controller Menu ===         19:03:23 08/03/2011

Serial Number   : 172921                Redundant Controller: Disabled
Hardware Version: Ver.J                 Start Time  : 11:19:23 08/03/2011
Software Version: V8.18.01 08/02/2011   Device Name: LOOP AM3440-A


[DISPLAY]                               [SETUP]
C -> System Configuration               S -> System Setup
B -> Clock source Configuration         M -> System Alarm Setup
Q -> Alarm Queue Summary                W -> Firmware Transfer
I -> Information Summary                V -> Store/Retrieve Configuration
R -> Redundant CTRL Information         K -> Clock source Setup
P -> Performance Report                 T -> Bit Error Rate Test

[LOG]                                   [MISC]
U -> Choose a Slot                      A -> Alarm Cut Off
F -> Log Off [SETUP],[MISC] Menu        X -> Clear Alarm Queue
O -> Log On  [SETUP],[MISC] Menu        Y -> Controller Return to Default
                                        Z -> Controller Reset
Redundant Board does not exist!
```

6.2.6 Performance Report

Press “P” from the Controller Menu, then press “A” to access DS0-SNCP performance report.

```
LOOP AM3440-A             === Performance Report ===       18:24:52 08/03/2011

                          A -> DS0-SNCP Performance

<< Press ESC key to return to Main Menu or enter a command >>
```

DS0-SNCP report is the 7-days performance data of the settled DS0-SNCP protection group. The sample screen below shows the system now has five working DS0-SNCP groups. You can see the timeslot, elapsed seconds of the protected slot and port.

```
LOOP AM3440-A           === DS0-SNCP Performance Report ===        18:04:15 10/08/2009

Idx Protected         AS
     S  P TS Elapsed [Today][10/07][10/06][10/05][10/04][10/03][10/02][10/01]
  1  A  0 01    165      82      .      .      .      .      .      .      .
  2  A  0 02    165      82      .      .      .      .      .      .      .
  3  A  0 03    165      82      .      .      .      .      .      .      .
  4  A  0 04    165      82      .      .      .      .      .      .      .
  5  A  0 05    165      82      .      .      .      .      .      .      .
```

Before you get access to “DS0-SNCP Performance Report”, make sure you have already set up at least one DS0-SNCP group with 3E1 plug-in cards. To set up DS0-SNCP protection, choose the DS0-SNCP setup function on the VT100 menu(command path: Main Menu> (S)System Setup> (K)DS0-SNCP Setup), set **DS0-SNCP** to “ENABLE”, and set **Action** to “Create”. Then, press ENTER.

```
LOOP AM3440-A                     === DS0-SNCP Setup ===               09:49:51 10/09/2009
ARROW KEYS: CURSOR MOVE, TAB: ROLL OPTIONS

DS0-SNCP : ENABLE
Using Map: MAP_1
Action   : Create

<< Press ESC key to return to previous menu >>
```

Select two 3E1 cards for DS0-SNCP protection and a particular plug-in card as the protected unit and confirm with the setting.

```
LOOP AM3440-A                  === DS0-SNCP Creation ===              09:49:12 10/09/2009
Please Input decimal number (1~31), BACKSPACE to edit

Protection Group Creation, Using map 1                     Total DS0-SNCP: 5
==============================================================================
Protected Slot: A   ( E1     )          [.PPPPP.........................]
          Port:      NON-CAS
          T.S.:01
         Count:05

Primary   Slot: 1   ( 3E1    )          [.WWWWW.........................]
          Port:P1    NON-CAS             Protection Delay: 00
          T.S.:01                       Upstream Send AIS: On

Secondary Slot: 2   ( 3E1    )          [.SSSSS.........................]
          Port:P1    NON-CAS             Protection Delay: 00
          T.S.:01                       Upstream Send AIS: On

Switch Mode   :Non-revertible
Confirm       :Yes

<< Press ESC key to return to previous menu >>
```

6.2.7 System Setup

Controller Menu > (S) System Setup
For details, see the following sections.

```
LOOP AM3440-A              === Controller Setup ===        18:26:15 08/03/2011


                          A -> System
                          S -> SNMP Setup
                          B -> Password
                          C -> TSI Map Setup
                          D -> Select a New TSI Map
                          E -> Copy a TSI Map to Another
                          F -> Clear a TSI Map
                          L -> Command Line
                          I -> Init New Card
                          J -> Clear Empty Slot
                          G -> Link Backup Function
                          Q -> QDS1 1:1 Protection
                          K -> DS0-SNCP Setup
                          R -> PDH Ring Protection
                          T -> PDH Ring Diagnostic
                          N -> SNTP Setup
                          H -> TELNET/SSH Setup
                          P -> Power Setup


<< Press ESC key to return to Main Menu or enter a command >>
```

6.2.7.1. System

Controller Menu > (S) System Setup > (A) System
This menu is allowed to set up configuration for system, console port, and TSI map. Network system setup is used to do different interface (LAN, WAN) IP setup. You can enable LAN or WAN or both for point to point communication. Setup procedure is as follows:

If you would like to manage your AM3440 units through inband management, go to “System Setup (MAP)” to activate TSI map setup first. The command path is: Main Menu> (S) Controller Setup > (C) TSI Map Setup. Choose “IB” (inband) for target slot, and then select the card type and port you would like to use. Then choose Yes to confirm your new settings.

```
LOOP AM3440-A              === System Setup (MAP) ===        15:38:08 12/03/2008
ARROW KEYS: CURSOR MOVE, TAB: ROLL OPTIONS
MAP NO: MAP_1
            Target     In-Band                  Source     Quad-E1 NON-CAS
Target      PO/TS D SL/PO TS PO/TS D SL/PO TS  PO/TS D SL/PO TS PO/TS D SL/PO TS
Slot  : IB  ===== ========== ===== ==========  ===== ========== ===== ==========
Port  :         1 d  1  1  1                   1  1 d IB     1    17 d
T.S.  : 01                                        2 d             18 d
                                                  3 d             19 d
                                                  4 d             20 d
T.S.# : 01                                        5 d             21 d
Clear : No                                        6 d             22 d
d/v   : d                                         7 d             23 d
                                                  8 d             24 d
                                                  9 d             25 d
Source                                           10 d             26 d
Slot  :  1                                       11 d             27 d
Port  : P1                                       12 d             28 d
T.S.  : 01                                       13 d             29 d
                                                 14 d             30 d
Confirm?Yes                                      15 d             31 d
                                                 16 d

<< Press ESC to return to Controller Setup menu, then Press D to active >>
```

Go back to system setup. First, enable your network by choosing “ON” for EN option. Then, key in the IP address and subnet mask of the unit you wish to communicate with. You can also choose HDLC or PPP for the frame. Press ESC to save your new setting. Once you complete the procedures above, the AM3440 units will start activating WAN network communication.

Note 1: To manage your AM3400 units through LAN, enable the LAN network and key in the IP address of the unit you would like to manage. It is a simple way to manage a specific AM3440 unit.

Note 2: To setup inband management, one 64K timeslot must be assigned for link to the controller (CTRL) through the internal cross-connect (XC). This timeslot must be either Slot D/Port4 or Slot 12/Port4.

Below are the plug-in card types that will be influenced by the timeslot limitation in either Slot D or Slot 12:

Slot	Plug-in Card
Slot D	FOM, MQE1, RTA
Slot 12	RTB, 4GH, TDMoE, QE1/QT1

Although the framing option for each of the 4 ports of a Quad E1/T1 interface card or a FOM interface can be configured either "unframed" or "framed", provision for inband management imposes limitation as follows: when one of these is selected for inband management, the Port 4 in that Slot, D or 12, must be configured to framed. For further information of inband management, please refer to Chapter 8, Appendix B: Inband Management.

The RTA, RTB, 4GH and TDMoE card supports up to 32 timeslots in normal condition. Due to the timeslot limitation, a 64K timeslot is reserved in the port 4 of Slot D and Slot 12. Therefore, users can only set up to 31 timeslots for these cards when they are plugged in either Slot D or Slot 12.

```
LOOP AM3440-A           === System Setup (SYSTEM) ===      18:28:37 08/03/2011
ARROW KEYS: CURSOR MOVE, Please Input: hh:mm:ss mm/dd/yyyy, BACKSPACE to edit
[System]
Time/Date    : 18:28:38 08/03/2011
Device Name  : LOOP AM3440-A

[Network]
NI   EN  IPAddress       SubnetMask      Frame      LB Timer
LAN :ON  010.003.023.095 255.255.000.000 Ethernet
WAN :OFF 010.004.001.001 255.255.255.000 HDLC       00000001
Gateway Interface: LAN   Gateway IPAddr: 000.000.000.000
Inband Uses Slot: D
[CONSOLE port]
Baud Rate    : 9600
Data Length  : 8-Bits
Stop Bit     : 1-Bit
Parity       : NONE
XON_XOFF     : XOFF

[TSI map]                               [Clock]
TSI Function   : 1:1(Bidirection)       Clock Mode   : Normal
Idle Signalling: 1010

<< Press ESC key to return to previous menu >>
```

Note: NI = Network Interface, EN = Enable (DIS=Disable), LB Timer = Loopback Timer

The system application for WAN and LAN communication is as below:

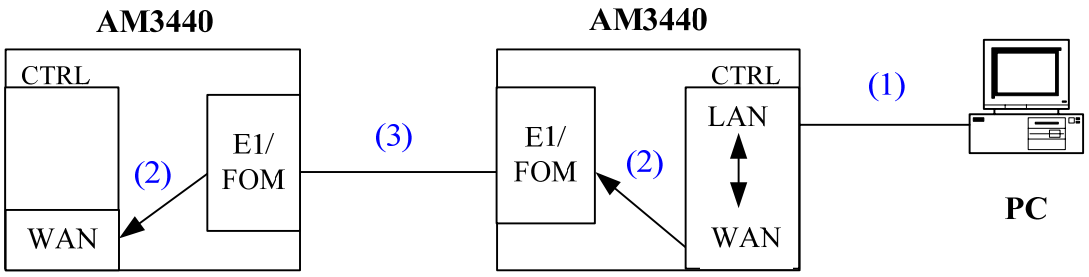

Note: IB= Inband

(1) Use VT100 terminal to enable LAN network (Ethernet Port). This way you can manage a specific AM3400 unit. If you would like to make a series of AM3400 units to communicate though WAN network, proceed to step (2).

(2) Once you start managing an AM3440 unit, go to “System Setup (MAP)” in VT100 and set up inband management. Also choose a desired plug-in card (E1 or FOM) for WAN network communication. Then, enable the WAN network and key in the IP address in “System Setup”. Follow the same procedure to set up the units you wish to manage though WAN network.

(3) AM3440 units will start communicating through E1 or FOM card under WAN network.

6.2.7.2. SNMP

Controller Menu > (S) System Setup > (S) SNMP Setup
The SNMP setup has 6 sub-menus.

```
LOOP AM3440-A                 === SNMP Setup ===          10:54:58 12/08/2006



                    A -> SNMP System Setup
                    B -> V1: Trap Setup
                    C -> V3: User-Based Security Model Setup
                    D -> V3: View-Based Access Control Model Setup 1
                    E -> V3: View-Based Access Control Model Setup 2
                    F -> V3: Target & Notify Setup









<< ESC key to return to previous menu, SPACE bar to refresh >>
```

SNMP System Setup

Controller Menu > (S) System Setup > (S) SNMP Setup > (A) SNMP System Setup
The user must select SNMP model for V1 only, V3 only or V1+V3 from the screen. The user can reset the device name, system location, and system contact info.

```
LOOP AM3440-A            === System Setup (SNMP) ===       18:29:51 08/03/2011
ARROW KEYS: CURSOR MOVE, BACKSPACE to edit, ESC to abort

Device Name    :LOOP AM3440-A_______
System Location:8F, No.8, HSIN ANN ROAD
                SCIENCE-BASED INDUSTRIAL PARK
                HSINCHU, 30078 TAIWAN

System Contact :Name: FAE   Tel:+886-3-5787696  Fax:+886-3-5787695
                E-mail:FAE@loop.com.tw


SNMP Model     : V1 only









<< Press ESC key to return to previous menu >>
```

V1: Trap Setup

Press B from the main menu to set up Trap and Community. The user can set a maximum of five trap IP for SNMPv1. The trap IP is the server's IP for NMS management. Once an alarm occurs in the AM3440 controller, the alarm will be sent to the target trap IP address trough LAN or WAN, depending on the trap system IP you choose.

To set up the Trap IP, follow the procedures below:

```
LOOP AM3440-A      === Trap and Community ===       12:09:51 07/15/2010
ARROW KEYS: CURSOR MOVE, TAB: ROLL OPTIONS

Get Community  : public                  Set Community  : public

Trap IP 1      : 000.000.000.000         Community Name : public
Trap IP 2      : 000.000.000.000         Community Name : public
Trap IP 3      : 000.000.000.000         Community Name : public
Trap IP 4      : 000.000.000.000         Community Name : public
Trap IP 5      : 000.000.000.000         Community Name : public

Trap system IP : WAN

Alarm/Trap Type: Vendor Spec

<< Press ESC key to return to previous menu >>
```

(1) (2) (3)

(1) Key in the trap IP address and its community name. The default setting for community name is "public".

(2) The trap system IP is the trap's source IP address. Select "LAN" or "WAN' for trap system IP, and the selection will determine the direction that sends the alarm trap. Note that the selection should be the same with the network interface (NI) that shows "ON" on the System Setup (System) screen. If LAN is "ON" and WAN is "OFF", choose "LAN" for system trap IP. If WAN is "ON" and LAN is "OFF", choose "WAN" for trap IP. On the sample screen below, both LAN and WAN are turned on. In this case, select either LAN or WAN for trap system IP according to your need.

```
LOOP AM3440-A          === System Setup (SYSTEM) ===      18:30:22 08/03/2011
ARROW KEYS: CURSOR MOVE, Please Input: hh:mm:ss mm/dd/yyyy, BACKSPACE to edit
[System]
Time/Date     : 18:30:23 08/03/2011
Device Name   : LOOP AM3440-A

[Network]
NI    EN  IPAddress       SubnetMask      Frame      LB Timer
LAN  :ON  010.003.023.010 255.255.000.000 Ethernet
WAN  :ON  020.001.001.002 255.255.000.000 HDLC       00000001
Gateway Interface: LAN   Gateway IPAddr: 000.000.000.000
Inband Uses Slot: 12      Note: Slot 12 port 4 can't use unframe mode!
```

(3) Select the Alarm/Trap Type to decide the format of alarm type displayed in SNMP menu. The alarm type tables for "Vendor Spec" and "Assigned" are listed in Appendix D: cc Alarm Type.

(4) Go to System Setup (command path: Main Menu> (S) Controller Setup> (A) System), set up the network interface type (LAN and WAN) and key in the IP address.

```
LOOP AM3440-A          === System Setup (SYSTEM) ===      18:30:22 08/03/2011
ARROW KEYS: CURSOR MOVE, TAB: ROLL OPTIONS
[System]
Time/Date    : 18:30:23 08/03/2011
Device Name  : LOOP AM3440-A

[Network]
NI   EN  IPAddress       SubnetMask      Frame      LB Timer
LAN :ON  010.003.023.010 255.255.000.000 Ethernet
WAN :ON  020.001.001.002 255.255.000.000 HDLC       00000001
Gateway Interface: LAN   Gateway IPAddr: 000.000.000.000
Inband Uses Slot: 12      Note: Slot 12 port 4 can't use unframe mode!mode!
[CONSOLE port]
Baud Rate    : 38400
Data Length  : 8-Bits
Stop Bit     : 1-Bit
Parity       : NONE
XON_XOFF     : XOFF

[TSI map]                          [Clock]
TSI Function   : 1:1(Bidirection)      Clock Mode   : Normal
Idle Signalling: 1010

<< Press ESC key to return to previous menu >>
```

(4)

Note: NI = Network Interface, EN = Enable (DIS=Disable), LB Timer = Loopback Timer

The system will automatically assign the trap IP to LAN IP or WAN IP according to the “trap system IP” and “Network interface” you set up.
Below is the table of trap source IP condition under different LAN and WAN settings.

Option	Setting				Trap Source IP
	LAN EN		WAN EN		
LAN	Off		Off		No trap
	Off	With IP	On		LAN IP
		Without IP (0.0.0.0)			WAN IP
	On		Off		LAN IP
	On		On		LAN IP
WAN	Off		Off		No Trap
	Off		On		WAN IP
	On		Off	With IP	WAN IP
				Without IP (0.0.0.0)	LAN IP
	On		On		WAN IP

Option= “Trap System IP” option on VT:Trap IP (Trap and Community) screen
Setting= “NI” (Network Interface) option on System Setup screen.

V3: User-Based Security Model Setup

Controller Menu > (S) System Setup > (S) SNMP Setup > (C) V3: User-Based Security Model Setup

For SNMPv3, user must setup USM and VACM. For USM, it is used to setup user authentication and privacy. Press C to setup V3: User-Based Security Model. There are 12 digit numbers for Engine ID. The user's name is "loopmd5" and 'loopsha", the password is "loop1234".

```
LOOP AM3440-A              === SNMP Setup (USM) ===        11:02:32 12/08/2006


[My Engine]        .       .       .
Engine ID : 00000337000000007F000001
Boots     : 8
Total User: 6

[User 01]             .       .       .
Engine ID    : 00000337000000007F000001
User Name    : loopmd5
Auth Protocol: MD5
Auth Key     : CD3644D218EB247E3697434F7F2B3E15
Priv Protocol: DES
Priv Key     : CD3644D218EB247E3697434F7F2B3E15
Status       : Active
Storage      : NonVolatile




<< ESC=>return to previous menu, LEFT/RIGHT=>prev/next user, F=>find user >>
<< E=>edit engine, ENTER=>edit user, C=>clone user, A=>add user, D=>delete >>
```

If you press Enter, an edit screen will appear. The user must enter a password. A delay will occur because of transfer time to record the key.

```
LOOP AM3440-A              === SNMP Setup (USM) ===        11:14:50 12/08/2006
ARROW KEYS: CURSOR MOVE, BACKSPACE to edit, ESC to abort

[My Engine]        .       .       .
Engine ID : 00000337000000007F000001
Boots     : 8
Total User: 6

[User 01]             .       .       .
Engine ID    : 00000337000000007F000001
User Name    : loopmd5
Auth Protocol: MD5
Auth Password: loop5678________________________
Priv Protocol: DES
Priv Password:
Status       : Active
Storage      : NonVolatile



[Skip password will not change current key.]
<< ESC key ignore and return, ENTER key accept change >>
```

V3: View-Based Access Control Model Setup 1

Controller Menu > (S) System Setup > (S) SNMP Setup > (D) V3: View-Based Access Control Model Setup 1

Press “D” to setup context and group, the user should be in a group. The default group name is “initial” and security name is name of user.

```
LOOP AM3440-A             === SNMP Setup (VACM) ===        11:09:22 12/08/2006


[Context] : (empty)




[Security to Group] 1/7
Security Model: V3(USM)
Security Name : loopmd5
Group Name    : initial
Status        : Active
Storage       : NonVolatile





<< ESC=>return to menu, UP/DOWN=>context/group, LEFT/RIGHT=>prev/next >>
<< F=>find, ENTER=>edit, A=>add, D=>delete >>
```

V3: View-Based Access Control Model Setup 2

Controller Menu > (S) System Setup > (S) SNMP Setup > (E) V3: View-Based Access Control Model Setup 2

Press “E” to edit Access and View for VACM, every group can define their own security level and have read and write access to view. “Item shows (reserved)” means that the item shown is not currently supported by this version. View contains 1 or more MIB sub-trees. The V3 driver will check incoming packages.

```
LOOP AM3440-A             === SNMP Setup (VACM) ===        11:18:28 12/08/2006

[Access] 1/3
Group Name       : loop1
Security Model   : V3(USM)
Security Level   : AuthPriv
Context Prefix   : (reserved)
Context Match    : (reserved)
Read View Name   : loop
Write View Name  : loop
Notify View Name: (reserved)
Status           : Active
Storage          : NonVolatile

[View Family] 1/5
View Name : one
Sub-tree  : 1.3.6.1.6.3
Mask      : (reserved)
Type      : include
Status    : Active
Storage   : NonVolatile

<< ESC=>return to previous menu, UP/DOWN=>Access/View, LEFT/RIGHT=>prev/next >>
<< ENTER=>edit, A=>add, D=>delete >>
```

V3: Target & Notify Setup

Controller Menu > (S) System Setup > (S) SNMP Setup > (F) V3: Target & Notify Setup
“F” command is to notify the V3 target (similar to situation with V1 trap).

```
LOOP AM3440-A        === SNMP Setup (Target & Notify) ===  11:24:06 12/08/2006

[Target] 1/2
Target Name: target2
Domain     : UDP
IP Address : 10.2.1.1         Notify Port: 162
Tag        : group2
Timeout    : 3                Retry      : 0
Parameter  : group2
Status     : Active
[Parameter] 1/2
Param Name : group2
MP Model   : V1
Sec Model  : V1
Sec Level  : NoAuthNoPriv
Sec Name   : public
Status     : Active
[Notify] 1/2
Name       : group1
Tag        : group1
Type       : Trap
Status     : Active
<< ESC=>return to menu, UP/DOWN=>Target/Parameter/Notify, LEFT/RIGHT=>prev/next
<< ENTER=>edit, A=>add, D=>delete >>
```

6.2.7.3. Password

Controller Menu > (S) System Setup > (B) Password

Under the "Controller Setup" menu, press “B” to enable or change password.

```
LOOP AM3440-A                                                18:32:57 08/03/2011
ARROW KEYS: CURSOR MOVE, TAB: ROLL OPTIONS


       Enable Password : YES
       Change Password : NO



<< Press ESC key to return to previous menu >>
```

6.2.7.4. TSI Map Setup

Controller Menu > (S) System Setup > (C) TSI Map Setup

Access the TSI Map setup, it allows up to set up to four maps setting, but only one can active. After choose the map number, select the desired slot and port number for the mapping target. Next, select the starting timeslot number (T.S) and the timeslot amount (T.S #), and data or voice mode (d/v) for the target. Also select the desired slot, port and starting timeslot number (T.S) for the mapping source. After setup, select “Yes” for confirmation.

```
LOOP AM3440-A                    === System Setup (MAP) ===      18:04:10 08/01/2011
ARROW KEYS: CURSOR MOVE, TAB: ROLL OPTIONS
MAP NO: MAP_1
            Target      E1       NON-CAS          Source      Quad-E1 NON-CAS
Target      PO/TS D SL/PO TS PO/TS D SL/PO TS   PO/TS D SL/PO TS PO/TS D SL/PO TS
Slot  :  A  ===== ========== ===== ==========   ===== ========== ===== ==========
Port  :         1 d  9  1  1    17 d  9  1 17   1  1 d  A     1  1 17 d  A    17
T.S.  : 01      2 d  9  1  2    18 d  9  1 18   1  2 d  A     2  1 18 d  A    18
                3 d  9  1  3    19 d  9  1 19   1  3 d  A     3  1 19 d  A    19
                4 d  9  1  4    20 d  9  1 20   1  4 d  A     4  1 20 d  A    20
T.S.# : 31      5 d  9  1  5    21 d  9  1 21   1  5 d  A     5  1 21 d  A    21
Clear : No      6 d  9  1  6    22 d  9  1 22   1  6 d  A     6  1 22 d  A    22
d/v   : d       7 d  9  1  7    23 d  9  1 23   1  7 d  A     7  1 23 d  A    23
                8 d  9  1  8    24 d  9  1 24   1  8 d  A     8  1 24 d  A    24
                9 d  9  1  9    25 d  9  1 25   1  9 d  A     9  1 25 d  A    25
Source         10 d  9  1 10    26 d  9  1 26   1 10 d  A    10  1 26 d  A    26
Slot  :  9     11 d  9  1 11    27 d  9  1 27   1 11 d  A    11  1 27 d  A    27
Port  :        12 d  9  1 12    28 d  9  1 28   1 12 d  A    12  1 28 d  A    28
T.S.  : 01     13 d  9  1 13    29 d  9  1 29   1 13 d  A    13  1 29 d  A    29
               14 d  9  1 14    30 d  9  1 30   1 14 d  A    14  1 30 d  A    30
Confirm?Yes    15 d  9  1 15    31 d  9  1 31   1 15 d  A    15  1 31 d  A    31
               16 d  9  1 16                    1 16 d  A    16

<< Press ESC to return to Controller Setup menu, then Press D to active >>
```

NOTE:

For voice cards, users do not have to select the time slot (T.S) data. The system will automatically adjust the T.S number according to the port number you set up. T.S 01 is for port1, T.S 02 is for port 2…and T.S 10 is for port 10. The T.S (time slot) number will always correspond to the port number.

After complete the TSI Map Setup, press ESC key, then the following screen shows up.

```
LOOP AM3440-A                    === System Setup (MAP) ===      18:12:42 08/01/2011


       Please use D-command (next screen) to activate map as current map.
       and        V-command (main menu) to save maps to Flash memory.

>> Press any key to continue.
```

After you change the TSI Map, you need to go to Select a New TSI Map to activate the new map.

6.2.7.5. Select a New TSI Map

Controller Menu > (S) System Setup > (D) Select a New TSI Map

This function is to allow change the active map from previous setting.
Sample below shows the new setting on Map 1 will replace the previous Map 1 by select MAP_1 on **Change to TSI Map**.

```
LOOP AM3440-A                 === System Setup (New map) ===     18:29:51 08/01/2011
ARROW KEYS: CURSOR MOVE, TAB: ROLL OPTIONS



                              Last activated TSI Map: MAP_1

                              Change to TSI Map      : MAP_1

          (This item will be ignored if anyone of the following is enabled.)


                            [TSI Map]    switch    start hr/min
                               Map1      DISABLE    00:00
                               Map2      DISABLE    00:00
                               Map3      DISABLE    00:00
                               Map4      DISABLE    00:00





<< Press ESC to return to previous menu >>
```

Note: when the TSI Map switch function has been selected. The upper setting of “Change to TSI Map” will not function.

The TSI Map setting shows below is function by Time duration setting. Sample below shows Map 1 enable from 00:00 to 11:59 and then it will switch to Map 2 from 12:00 to 23:59. The map3 and map 4 will not function due to disable.

```
                            [TSI Map]    switch    start hr/min
                               Map1      ENABLE     00:00
                               Map2      ENABLE     12:00
                               Map3      DISABLE    00:00
                               Map4      DISABLE    00:00
```

You can view the TSI Map setting from Controller Menu > (C) System Configuration > (C) Current TSI Map

6.2.7.6. Copy a TSI Map to another

Controller Menu > (S) System Setup > (E) Copy a TSI Map to Another

This function is to copy the TSI map from one to another.

```
LOOP AM3440-A              === System Setup (Copy) ===        18:39:44 08/03/2011
ARROW KEYS: CURSOR MOVE, TAB: ROLL OPTIONS



                        Copy TSI Map from MAP_1 to MAP_2




<< Press ESC to return to Controller Setup menu, then Press D to active >>
```

6.2.7.7. Clear a TSI Map

Controller Menu > (S) System Setup > (F) Clear a TSI Map

This function is to clear the selected TSI map setting.

```
LOOP AM3440-A              === System Setup (Clear) ===      19:09:12 03/01/2001
ARROW KEYS: CURSOR MOVE, TAB: ROLL OPTIONS




                           Clear TSI Map         : MAP_1




<< Press ESC to return to Controller Setup menu, then Press D to active >>
```

6.2.7.8. Command Line

Controller Menu > (S) System Setup > (L) Command Line
This function is for FAE support use.
Press "?", then press ENTER; the system will list all available commands. Then key in a desired command to get the detail description. To return to the "Controller Setup" menu, press "q".

```
Press ? get help or QUIT return.                 18:37:48 Aug 01/11  Insert
18:36:54 Aug 01/11 >>?
Available Commands:
  quit           help           passcode       ether          arp
  ping           fbank          fboot          upgrade        syslog
  auto_save      inactive       pdh_spring     capture        fae_upload
  resume         txtcfg
18:37:03 Aug 01/11 >>help
Commands Support:
  quit -------------------> Quit command support.
  help -------------------> This help message.
  ether status/clear -----> Display/Clear ethernet status.
  arp/clrarp -------------> Print/Clear ARP table.
  ping ip ----------------> Ping an ip address.
  fbank ------------------> Display or set firmware bank in Flash.
  fboot ------------------> Download boot-up code (DANGER!!).
  syslog -----------------> Dump system log.
  auto_save [sec] --------> Display or set auto-save time.
  inactive [sec] ---------> Display or set detect time for card inactive.
  pdh_spring -------------> Enable PDH-SPRing (need charge for password).
  upgrade qe1/qt1/gshdsl -> Batch download firmware of QE1/QT1/G.sdhsl card.
          mdsl/dte -------> Batch download firmware of MDSL/DTE card.
          dtu/rs232 ------> Batch download firmware of DTU10/RS232 card.
18:37:11 Aug 01/11 >>
```

6.2.7.9. Init New Card

Controller Menu > (S) System Setup > (I) Init New Card

This function is to initiate the new card.

Below sample screen shows the status of Slot B and Slot D are mismatch. Then, select B and press Enter. Type Y for confirmation.

```
LOOP AM3440-A                    === Init a New Card ===         18:53:43 08/01/2011
ARROW KEYS: CURSOR MOVE, TAB: ROLL OPTIONS

Slot Model         State                Slot Model         State
 A   FE1                                 5
 B   FE1           mismatch              6
 C                                       7
 D   FOM           mismatch              8
 1                                       9   Quad E1
 2                                       10  Quad E1
 3                                       11
 4                                       12



This command will clear the related TSI and init the unit with default!!!

Select Slot :  B





>> Are you sure (Y/N)?
```

After the initialize procedure completed, go to Controller Menu > (I) Information Summary to check the result.

```
LOOP AM3440-A                    === Init a New Card ===         18:53:43 08/01/2011
ARROW KEYS: CURSOR MOVE, TAB: ROLL OPTIONS

Slot Model         State                Slot Model         State
 A   FE1                                 5
 B   FE1                                 6
 C                                       7
 D   FOM           mismatch              8
 1                                       9   Quad E1
 2                                       10  Quad E1
 3                                       11
 4                                       12



This command will clear the related TSI and init the unit with default !!!

Select Slot :  D


Please wait at least 10 seconds for initialize procedure.


<< ESC key ignore and return, ENTER key accept change >>
```

6.2.7.10. Clear Empty Slot

Controller Menu > (S) System Setup > (J) Clear Empty Slot

This function is to clear the empty slot. The sample below shows to select D than press enter to accept.

```
LOOP AM3440-A                  === Clear Empty Slot ===       19:02:22 08/01/2011
ARROW KEYS: CURSOR MOVE, TAB: ROLL OPTIONS

Slot Registered Model State             Slot Registered Model State
 A   FE1                                 5
 B   FE1                                 6
 C                                       7
 D   FE1              unplugged          8
 1                                       9   Quad E1
 2                                       10  Quad E1
 3                                       11  Quad E1          unplugged
 4                                       12



This command will clear the related TSI and clear the slot with ZERO !!!

Select Slot :  D





<< ESC key ignore and return, ENTER key accept change >>
```

The setting is completed. You can move to another slot if any.

```
LOOP AM3440-A                  === Clear Empty Slot ===       19:02:22 08/01/2011
ARROW KEYS: CURSOR MOVE, TAB: ROLL OPTIONS

Slot Registered Model State             Slot Registered Model State
 A   FE1                                 5
 B   FE1                                 6
 C                                       7
 D   FE1                                 8
 1                                       9   Quad E1
 2                                       10  Quad E1
 3                                       11  Quad E1          unplugged
 4                                       12



This command will clear the related TSI and clear the slot with ZERO !!!

Select Slot : 11

Clear...OK!



<< ESC key ignore and return, ENTER key accept change >>
```

6.2.7.11. Link back up

For Link back up screen, please refer to Appendix A.

6.2.7.12. QDS1 1:1 Protection

For QDS1 1:1 protection screen, please refer to Appendix C.

6.2.7.13. DS0-SNCP Setup

Follow the command path “Controller Menu> (S)System Setup> (K)DS0-SNCP Setup” to access DS0-SNCP setup. Set **DS0-SNCP** to “ENABLE”, and set **Action** to “Create”. Then, press ENTER.

```
LOOP AM3440-A                    === DS0-SNCP Setup ===                09:49:51 10/09/2009
ARROW KEYS: CURSOR MOVE, TAB: ROLL OPTIONS

DS0-SNCP : ENABLE
Using Map: MAP_1
Action   : Create

<< Press ESC key to return to previous menu >>
```

Select two 3E1 cards for DS0-SNCP protection and a particular plug-in card as the protected unit and confirm with the setting.

```
LOOP AM3440-A                 === DS0-SNCP Creation ===              09:49:12 10/09/2009
Please Input decimal number (1~31), BACKSPACE to edit
Protection Group Creation, Using map 1                     Total DS0-SNCP: 5
==============================================================================
Protected Slot: A   ( E1     )          [.PPPPP........................]
          Port:      NON-CAS
          T.S.:01
         Count:05

Primary   Slot: 1   ( 3E1    )          [.WWWWW........................]
          Port:P1    NON-CAS             Protection Delay: 00
          T.S.:01                       Upstream Send AIS: On

Secondary Slot: 2   ( 3E1    )          [.SSSSS........................]
          Port:P1    NON-CAS             Protection Delay: 00
          T.S.:01                       Upstream Send AIS: On

Switch Mode   :Non-revertible
Confirm       :Yes

<< Press ESC key to return to previous menu >>
```

Note: “PDH Ring Protection” and “PDH Ring Diagnostic” are optional functions. To access theses two optional functions, you must order the controller card with PDH function, or these two functions will not show on the VT100 menu. Also, only QE1, QT1, 1FOMA, FOM, and Mini QE1 plug-in cards support PDH function.

6.2.7.14. PDH Ring Protection

Follow the command path “Controller Menu> (S) System Setup> (R) PDH Ring Protection” to access PDH Ring Protection. Enable PDH ring protection, and set up the switching interval, station type and alarm filtering.

```
LOOP AM3440-A            === PDH Ring Protection ===       18:10:53 02/16/2012
ARROW KEYS: Cursor move; Change options by TAB, or by typing
PDH Ring Protection: ENABLE             Ring Station   : SLAVE
Switching Interval : 05                 Alarm Filtering: 030
Slot(Model)          Port 1    Port 2    Port 3    Port 4
==============       =======   =======   =======   =======
 A  (MQuad E1   )    DISABLE   DISABLE   DISABLE   DISABLE
 B  (           )    -------   -------   -------   -------
 C  (           )    -------   -------   -------   -------
 D  (           )    -------   -------   -------   -------
 1  (Quad E1    )    ENABLE    DISABLE   DISABLE   DISABLE
 2  (Quad E1    )    DISABLE   DISABLE   DISABLE   DISABLE
 3  (Quad E1    )    DISABLE   DISABLE   DISABLE   DISABLE
 4  (           )    -------   -------   -------   -------
 5  (FOM        )    ENABLE    DISABLE   DISABLE   DISABLE
 6  (           )    -------   -------   -------   -------
 7  (           )    -------   -------   -------   -------
 8  (           )    -------   -------   -------   -------
 9  (           )    -------   -------   -------   -------
 10 (           )    -------   -------   -------   -------
 11 (           )    -------   -------   -------   -------
 12 (           )    -------   -------   -------   -------

<< Press ESC key to return to previous menu >>
```

Comment	Option	Default
PDH Ring Protection	Enable, Disable	Disable
Switching Interval	5 to 99	5
Ring Station	Slave, Master	Slave
Alarm Filtering	0 to 180 second	0

Note: Alarm Filtering function is only available to QE1, QT1, and Mini QE1 cards.

6.2.7.15. PDH Ring Diagnostic

Follow the command path “Controller Menu> (S) System Setup> (T) PDH Ring Diagnostic” to access PDH Ring Protection.

```
LOOP AM3440-A            === PDH Ring Diagnostic ===       17:04:27 07/09/2009

ARROW KEYS: CURSOR MOVE, TAB: ROLL OPTIONS


Slot(Model)          Port 1    Port 2    Port 3    Port 4
==============       =======   =======   =======   =======
 C  (           )    -------   -------   -------   -------
 D  (           )    -------   -------   -------   -------
 1  (Quad E1    )    ENABLE    ENABLE    DISABLE   DISABLE
 2  (           )    -------   -------   -------   -------
 3  (           )    -------   -------   -------   -------
 4  (           )    -------   -------   -------   -------
 5  (           )    -------   -------   -------   -------
 6  (           )    -------   -------   -------   -------
 7  (           )    -------   -------   -------   -------
 8  (           )    -------   -------   -------   -------
 9  (           )    -------   -------   -------   -------
 10 (           )    -------   -------   -------   -------
 11 (           )    -------   -------   -------   -------
 12 (           )    -------   -------   -------   -------



<< Press ESC key to return to previous menu >>
```

6.2.7.16. SNTP Setup

Controller Menu > (S) System Setup > (N) SNTP Setup

This function is SNTP server setup. Simple Network Timing Protocol (SNTP) is an adaptation of the Network Time Protocol (NTP) used to synchronize computer clocks in the Internet.

```
LOOP AM3440-A                        === SNTP setup ===          09:17:12 02/20/2008
ARROW KEYS: CURSOR MOVE, TAB/`: ROLL UP/DOWN OPTIONS

SNTP ON/OFF    : OFF
SNTP server 1 : 000.000.000.000
SNTP server 2 : 000.000.000.000

SNTP timezone : +0









<< Press ESC key to return to previous menu >>
```

6.2.7.17. TELNET/SSH Setup

Controller Menu > (S) System Setup > (H) TELNET/SSH Setup

SSH (Secure Shell) is a network protocol that allows data to be exchanged over a secure channel between two computers. Encryption provides confidentiality and integrity of data. SSH uses public-key cryptography to authenticate the remote computer and allow the remote computer to authenticate the user, if necessary. TELNET (TELecommunication NETwork) is a network protocol used on the Internet or local area network (LAN) connections.

```
LOOP AM3440-A              === TELNET/SSH Setup ===        11:42:03 03/07/2008
ARROW KEYS : CURSOR MOVE , ENTER KEY : ITEM SELECT


SSH    Server : OTF

TELNET Server : OFF





<< Press ESC key to return to previous menu >>
```

Note:

Configuration	Option	Default
SSH Server	ON, OFF	
TELNET Server	ON, OFF	OFF

6.2.7.18. Power Setup

Controller Menu > (S) System Setup > (P) Power Setup

The default value is -48 V DC. Of the three kinds of power type: -48V DC, 125 V DC, and AC**,** the system of AM3440 will not note the power type**,** so the user needs to choose it manually.

```
LOOP AM3440-A              === Power Setup ===
17:45:58 08/21/2007
ARROW KEYS: CURSOR MOVE, TAB: ROLL OPTIONS

Power: TYPE: -48V DC
Power: TYPE: -48V DC









<< Press ESC key to return to previous menu >>
```

6.2.7.19. Multicast Mapping Procedure

```
LOOP AM3440-A              === Controller Menu ===         18:03:32 10/08/2009

Serial Number   : 123526                Redundant Controller: Enabled
Hardware Version: Ver.J                 Start Time  : 11:25:29 10/08/2009
Software Version: V8.05.01 09/29/2009   Device Name: LOOP AM3440-A



[DISPLAY]                               [SETUP]
C -> System Configuration               S -> System Setup
B -> Clock source Configuration         M -> System Alarm Setup
Q -> Alarm Queue Summary                W -> Firmware Transfer
I -> Information Summary                V -> Store/Retrieve Configuration
R -> Redundant Board Information        K -> Clock source Setup
P -> Performance Report                 T -> Bit Error Rate Test

[LOG]                                   [MISC]
U -> Choose a Slot                      A -> Alarm Cut Off
F -> Log Off [SETUP],[MISC] Menu        X -> Clear Alarm Queue
O -> Log On  [SETUP],[MISC] Menu        Y -> Controller Return to Default
                                        Z -> Controller Reset


>>SPACE bar to refresh or enter a command ===>
```

Press “S” from the Controller Menu screen to enter into the Controller Setup menu, see also below screen.

```
LOOP AM3440-A              === Controller Setup ===        11:49:25 10/09/2009


                           A -> System
                           S -> SNMP Setup
                           B -> Password
                           C -> TSI Map Setup
                           D -> Select a New TSI Map
                           E -> Copy a TSI Map to Another
                           F -> Clear a TSI Map
                           L -> Command Line
                           I -> Init New Card
                           J -> Clear Empty Slot
                           G -> Link Backup Function
                           Q -> QDS1 1:1 Protection
                           K -> DS0-SNCP Setup
                           R -> PDH Ring Protection
                           T -> PDH Ring Diagnostic
                           N -> SNTP Setup
                           H -> TELNET/SSH Setup
                           P -> Power Setup


<< Press ESC key to return to Main Menu or enter a command >>
```

Press "A" from the above "Controller Setup" menu to set up system configuration. Then move the cursor at "TSI Function" option and use TAB or "`" key to set "TSI Function" as 1: N (Multicast). Press ESC to return to the "Controller Setup" menu.

```
LOOP AM3440-A           === System Setup (SYSTEM) ===      16:40:56 09/09/2011
ARROW KEYS: CURSOR MOVE, TAB: ROLL OPTIONS
[System]
Time/Date     : 16:40:57 09/09/2011
Device Name   : LOOP AM3440-A

[Network]
NI   EN  IPAddress       SubnetMask      Frame      LB Timer
LAN :ON  010.003.023.095 255.255.000.000 Ethernet
WAN :OFF 010.004.001.001 255.255.255.000 HDLC       00000001
Gateway Interface: LAN   Gateway IPAddr: 000.000.000.000
Inband Uses Slot: D
[CONSOLE port]
Baud Rate     : 9600
Data Length   : 8-Bits
Stop Bit      : 1-Bit
Parity        : NONE
XON_XOFF      : XOFF

[TSI map]
TSI Function    : 1:N(Multicast)         Clock Mode    : SSM
Idle Signalling: 1010

<< Press ESC key to return to previous menu >>
```

Before setting TSI map for this 1: N (Multicast) TSI function, make sure the previous TSI map setting is cleared up.

```
LOOP AM3440-A              === Controller Setup ===        11:49:25 10/09/2009


                          A -> System
                          S -> SNMP Setup
                          B -> Password
                          C -> TSI Map Setup
                          D -> Select a New TSI Map
                          E -> Copy a TSI Map to Another
                          F -> Clear a TSI Map
                          L -> Command Line
                          I -> Init New Card
                          J -> Clear Empty Slot
                          G -> Link Backup Function
                          Q -> QDS1 1:1 Protection
                          K -> DS0-SNCP Setup
                          R -> PDH Ring Protection
                          T -> PDH Ring Diagnostic
                          N -> SNTP Setup
                          H -> TELNET/SSH Setup
                          P -> Power Setup


<< Press ESC key to return to Main Menu or enter a command >>
```

Press "F" from the above "Controller Setup" menu to clear the previous TSI map. Then press ESC to return to the "Controller Setup" menu.

```
LOOP AM3440-A              === System Setup (Clear) ===      19:09:12 03/01/2001
ARROW KEYS: CURSOR MOVE, TAB: ROLL OPTIONS




                            Clear TSI Map         : MAP_3



<< Press ESC to return to Controller Setup menu, then Press D to active >>
```

Then press "C" from the above "Controller Setup" menu to set system map. The following two screens show map settings for the right side's example.

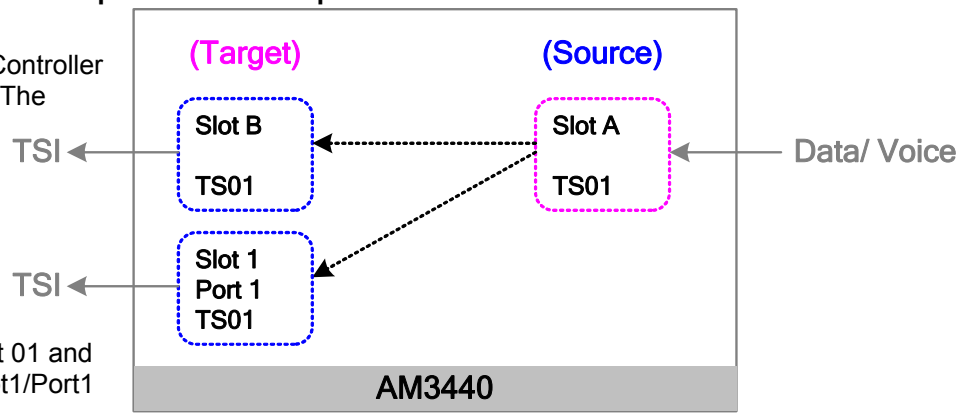

Below settings are for SlotA time slot 01 mapping to SlotB time slot 01 and SlotA time slot 01 mapping to Slot1/Port1 time slot 01.

```
LOOP AM3440-A            === System Setup (SYSTEM) ===      18:28:37 08/03/2011
ARROW KEYS: CURSOR MOVE, Please Input: hh:mm:ss mm/dd/yyyy, BACKSPACE to edit
[System]
Time/Date     : 18:28:38 08/03/2011
Device Name   : LOOP AM3440-A

[Network]
NI    EN  IPAddress        SubnetMask       Frame       LB Timer
LAN :ON   010.003.023.095 255.255.000.000 Ethernet
WAN :OFF 010.004.001.001 255.255.255.000 HDLC        00000001
Gateway Interface: LAN    Gateway IPAddr: 000.000.000.000
Inband Uses Slot: D
[CONSOLE port]
Baud Rate     : 9600
Data Length   : 8-Bits
Stop Bit      : 1-Bit
Parity        : NONE
XON_XOFF      : XOFF

[TSI map]                                  [Clock]
TSI Function    : 1:1(Bidirection)         Clock Mode    : Normal
Idle Signalling: 1010

<< Press ESC key to return to previous menu >>
```

Below setting is for mapping Slot A's time slot 01 to Slot B's time slot 01.

```
LOOP AM3440-A              === System Setup (MAP) ===        10:57:08 09/29/2011
ARROW KEYS: CURSOR MOVE, TAB: ROLL OPTIONS
MAP NO: MAP_1
            Target      E1       NON-CAS          Source      E1       NON-CAS
Target      PO/TS D SL/PO TS PO/TS D SL/PO TS   PO/TS D SL/PO TS PO/TS D SL/PO TS
Slot   :  B  ===== ========== ===== ==========   ===== ========== ===== ==========
Port   :        1 d  A     1    17 d                1 d              17 d
T.S.   : 01     2 d             18 d                2 d              18 d
                3 d             19 d                3 d              19 d
                4 d             20 d                4 d              20 d
T.S.# : 01      5 d             21 d                5 d              21 d
Clear : No      6 d             22 d                6 d              22 d
d/v   : d       7 d             23 d                7 d              23 d
                8 d             24 d                8 d              24 d
                9 d             25 d                9 d              25 d
Source         10 d             26 d               10 d              26 d
Slot   :  A    11 d             27 d               11 d              27 d
Port   :       12 d             28 d               12 d              28 d
T.S.   : 01    13 d             29 d               13 d              29 d
               14 d             30 d               14 d              30 d
Confirm?Yes    15 d             31 d               15 d              31 d
               16 d                                16 d

<< Press ESC to return to Controller Setup menu, then Press D to active >>
```

Below setting is for mapping Slot A's time slot 01 to Slot 1/Port 1's time slot 01.

```
LOOP AM3440-A             === System Setup (MAP) ===       10:57:08 09/29/2011
ARROW KEYS: CURSOR MOVE, TAB: ROLL OPTIONS
MAP NO: MAP_1
             Target     Quad-E1 NON-CAS         Source     E1      NON-CAS
Target       PO/TS D SL/PO TS PO/TS D SL/PO TS  PO/TS D SL/PO TS PO/TS D SL/PO TS
Slot  :  1   ===== ========== ===== ==========  ===== ========== ===== ==========
Port  : P1    1  1 d  A     1    17 d               1 d             17 d
T.S.  : 01       2 d             18 d               2 d             18 d
                 3 d             19 d               3 d             19 d
                 4 d             20 d               4 d             20 d
T.S.# : 01       5 d             21 d               5 d             21 d
Clear : No       6 d             22 d               6 d             22 d
d/v   : d        7 d             23 d               7 d             23 d
                 8 d             24 d               8 d             24 d
                 9 d             25 d               9 d             25 d
Source          10 d             26 d              10 d             26 d
Slot  :  A      11 d             27 d              11 d             27 d
Port  :         12 d             28 d              12 d             28 d
T.S.  : 01      13 d             29 d              13 d             29 d
                14 d             30 d              14 d             30 d
Confirm?Yes     15 d             31 d              15 d             31 d
                16 d                               16 d

<< Press ESC to return to Controller Setup menu, then Press D to active >>
```

Press "D" to enable this map as the current map.

```
LOOP AM3440-A             === System Setup (MAP) ===       14:49:50 02/21/2005




       Please use D-command (next screen) to active map as current map.
       and        V-command (main menu) to save maps to Flash memory.




>> Press any key to continue.
```

```
LOOP AM3440-A           === System Setup (New map) ===     14:55:34 09/30/2003
ARROW KEYS: CURSOR MOVE, TAB: ROLL OPTIONS



                            Last activated TSI Map: MAP_3

                            Change to TSI Map     : MAP_3

         (This item will be ignored if anyone of the following is enabled.)


                          [TSI Map]   switch   start hr/min
                             Map1     DISABLE   00:00
                             Map2     DISABLE   00:00
                             Map3     DISABLE   00:00
                             Map4     DISABLE   00:00




<< Press ESC to return to Controller Setup menu, then Press D to active >>
```

Enable MAP_3 as the current TSI map. Then press "Y" to confirm the setting or "N" to abort. To save the new map configuration to flash memory, press "V" from the "Controller Menu".

```
LOOP AM3440-A            === System Setup (New map) ===     14:55:34 09/30/2003
ARROW KEYS: CURSOR MOVE, TAB: ROLL OPTIONS



                            Last activated TSI Map: MAP_3

                            Change to TSI Map     : MAP_3

          (This item will be ignored if anyone of the following is enabled.)


                         [TSI Map]   switch   start hr/min
                            Map1     DISABLE   00:00
                            Map2     DISABLE   00:00
                            Map3     ENABLE    00:00
                            Map4     DISABLE   00:00





<< Press ESC to return to Controller Setup menu, then Press D to active >>
```

6.2.8 System Alarm Setup

Under the Controller Menu, press “M” to set up system alarm as below. The alarm action includes “Disable”, “Enable” and “EN_NEW”, each supports different alarm commands. Please refer to Appendix D "Alarm Setup Indication" for setup detail.

The Alarm Relay is applied to configure the Alarm Relay output present on the front panel of AM3440 controller. The alarm relay circuit will be triggered when an alarm is detected. To return the alarm relay to the normal state, the user has three options to choose from. The detailed description for each option is listed below:

AUTO: The alarm relay will return to normal state once the problem of all detected alarm is solved. To check the alarm status, see the (Q) Alarm Queue Summary screen. The alarm status “clear” indicates the problem of the alarm s is solved.

PERIOD: The user has to set up a time limit first, and the default setting is 2 seconds. That means the alarm relay will return to normal condition after 2 seconds the alarm is detected.

MANUAL: When alarms are detected and reported to CTRL card , the user has to cut off all the alarms manually by pressing the ACO button on the controller’s front panel, or by activating “(A) Alarm Cut off “ from the main menu. Then, the alarm relay will return to the normal state.

DISABLE: The alarm relay will remain disabled when alarms occur.

```
LOOP AM3440-A          === System Alarm Setup ===       18:18:54 09/30/2010
ARROW KEYS: CURSOR MOVE, TAB: ROLL OPTIONS


[Alarm Action]
ALARM          : ENABLE
RELAY          : PERIOD                  PERIOD (s): 2

[Alarm Type]
ALARM CUT OFF : MAJOR
SLOT INACTIVE : MAJOR
SLOT START-UP : MAJOR
CLOCK LOSS    : MAJOR
LINK SWITCH   : MAJOR
MAP SWITCH    : MAJOR
POWER ALARM   : MAJOR
TYPE MISMATCH : MAJOR
DUAL-CPU ALARM: MAJOR
MANAGEMENT ALM: MAJOR



<< Press ESC key to return to previous menu >>
```

6.2.9 Firmware Transfer

IMPORTANT!!

Start from **V8.19.01**, the **Firmware Protection Function** applies.

- Under Warranty, free of charge to upgrade the firmware.
- After Warranty expires, Loop Telecom will charge for the firmware upgrade.

For more detail, please contact Loop Telecom or sales representative near you.

Under the Controller Menu, press “W” to enter in the screen of File Transfer as below.

Note: Check the current hardware version before firmware upgrade. Make sure the existing hardware version is compatible to the updated firmware version. For more details, please contact Loop Telecom.

```
LOOP AM3440-A              === File Transfer ===          14:51:25 12/12/2011



                      A -> Download Mainboard Firmware
                      C -> Download Configuration
                      D -> Upload Configuration
                      E -> Download Mainboard Boot-up
                      R -> Copy Firmware to Redundant









<< Press ESC key to return to Main Menu or enter a command >>
```

6.2.9.1. Download Mainboard Firmware

```
LOOP AM3440-A           === Download Firmware ===       10:38:01 12/13/2011
ARROW KEYS: CURSOR MOVE, BACKSPACE to edit, ESC to abort

Firmware 1 Version    : V8.17.03 07/20/2011
Firmware 2 Version    : V8.18.02 09/19/2011
Current Firmware Bank: 2
Next Boot Firmware    : 2
TFTP Server IP        : 10.3.23.1
Firmware File Name    : v8.19.01.run


            10:40:10 12/13/11  Downiloading firmware .Received 471 Blocks
            10:40:13 12/13/11  Received 241297 bytes
            10:40:13 12/13/11  Checksum ok.
            10:40:13 12/13/11  Write firmware file to flash:  57%









<< ESC key ignore and return, ENTER key accept change >>
```

6.2.9.2. Application of upload / download configuration

The configuration of a properly set up AM3440 device can be quickly uploaded to a TFTP server and then downloaded to other AM3440 devices even if they are not loaded with plug-in cards. This simplifies the set up for mass deployment of new devices, each with same plug in plug-in cards and same configuration.

By using the “I” command in the controller menu of one of the newly deployed devices a user can retrieve the plug-in card types for which the downloaded configuration will need. The sample screen is shown below.

```
LOOP AM3440-A            === Information Summary ===       14:52:20 09/19/2011

Slot Card/Interface     Serial   Software Version    Registered Card
==== ================   ======  ===================  ===============
 A   FE1 120ohm         N/A     V4.02.05 12/17/2010  FE1
 B   FE1 120ohm         N/A     V3.05.01 09/21/2007  FE1
 C
 D                                                   FOM             unplugged

==== ================   ======  ===================  ===============
 1   Quad E1                    V3.test2 06/17/2011  8DBRA           mismatch
 2
 3
 4
 5   FOM                N/A                          FOM
 6   FOM                N/A                          FOM
 7
 8
 9                                                   Quad E1         unplugged
 10  Quad E1            010594  V3.test2 06/17/2011  Quad E1
 11
 12

<< ESC key to return to previous menu, SPACE bar to refresh >>
```

Upload Configuration

```
LOOP AM3440-A            === Upload Configuration ===      14:53:05 09/19/2011
ARROW KEYS: CURSOR MOVE, Please Input: nnn.nnn.nnn.nnn, BACKSPACE to edit




TFTP Server IP       : 000.000.000.000
Config File Name     :



<< ESC key ignore and return, ENTER key accept change >>
```

Download Configuration

```
LOOP AM3440-A           === Download Configuration ===     14:53:39 09/19/2011
ARROW KEYS: CURSOR MOVE, Please Input: nnn.nnn.nnn.nnn, BACKSPACE to edit




TFTP Server IP        : 000.000.000.000
Config File Name      :



<< ESC key ignore and return, ENTER key accept change >>
```

6.2.9.3. Copy Firmware to Redundant

After completed the download firmware, the Copy Firmware to Redundant Board screen will be shown. Press Yes to copy the new firmware to Redundant controller. If the device only has one controller, this screen won't show up.

```
LOOP AM3440-A  ===Copy Firmware to Redundant Board=== 10:41:27 12/13/2011


 Current Firmware Bank: 2
 NextBootFirmware Bank: 1

===> Transferring Firmware to Redundant Board
100%  Transfer Complete !

===> Programming the Flash in Redundant Board
100%  Programming Complete !
Remember to Reboot to Run the New Firmware !



==>> Enter password : XXXXX
```

Download Firmware Procedure

To download firmware using console port via LoopTerm, use the follow procedure:

Single controller:

1 Setup the VT-100 connection
2 Setup TFTP server in PC
3 Download the firmware file: xxxxxx.run
4 Do warm reset primary controller board
5 Firmware download procedure complete

Dual Controllers:

1 Setup the VT-100 connection
2 Setup TFTP server in PC
3 Download the firmware file: xxxxxx.run
4 Copy Firmware to redundant board
5 Do warm reset in primary controller board
6 Firmware download for the primary controller board procedure complete
7 Do reset in redundant board
8 Firmware download for the redundant controller board procedure complete.

Note: The name of the run code file name will be provided by Loop and will vary.

The following step by step procedure uses dual controller device as example.

Note: The Dual controller procedure includes the Single controller procedure.

Download Firmware File with dual controller cards:

1. Command Path: Controller Menu > (W) Firmware Transfer > (A) Download Mainboard Firmware
2. When the Download Firmware screen appears, key-in the TFTP Server IP number and Firmware File Name: xxxxxx.run. (this example use v8.19.01.run) Then press Enter to start process the download. The screen shown below is Firmware Downloading

```
LOOP AM3440-A           === Download Firmware ===       10:38:01 12/13/2011
ARROW KEYS: CURSOR MOVE, BACKSPACE to edit, ESC to abort

Firmware 1 Version    : V8.17.03 07/20/2011
Firmware 2 Version    : V8.18.02 09/19/2011
Current Firmware Bank: 2
Next Boot Firmware    : 2
TFTP Server IP        : 10.3.23.1
Firmware File Name    : v8.19.01.run


           10:40:10 12/13/11  Downloading firmware .Received 471 Blocks
           10:40:13 12/13/11  Received 241297 bytes
           10:40:13 12/13/11  Checksum ok.
           10:40:13 12/13/11  Write firmware file to flash:  57%

<< ESC key ignore and return, ENTER key accept change >>
```

3. After completed the download firmware, the Copy Firmware to Redundant Board screen will be shown. Press Yes to copy the new firmware to Redundant controller. If the device only has controller, this screen won't show up.

```
LOOP AM3440-A     ===Copy Firmware to Redundant Board=== 10:41:27 12/13/2011


 Current Firmware Bank: 2
 NextBootFirmware Bank: 1

 Copy firmware to Redundant Board - are you sure ?
```

4. The screen shows the process of transferring firmware to redundant controller. If password protected, you need to key-in the password.

```
LOOP AM3440-A    ===Copy Firmware to Redundant Board=== 10:41:27 12/13/2011


 Current Firmware Bank: 2
 NextBootFirmware Bank: 1

===> Transferring Firmware to Redundan Board
100%  Transfer Complete !

===> Programming the Flash in Redundant Board
100%  Programming Complete !
Remember to Reboot to Run the New Firmware !









==>> Enter password : XXXXX
```

5. The firmware download procedure has completed.

Configure the Controller Reset

1. Command Path: Controller Menu > (Z) Controller Reset
2. The Reset Control Board screen appears. Select **Primary** and **Warm Restart** and then press **Enter**. The screen shows Resetting…

```
LOOP AM3440-A          === Reset Control Board ===      14:52:10 02/29/2012









>> Select ?    Redundant *Primary     System
>> Restart Mode ?    *Warm Restart    Cold Restart
 ===> Reseting .....
```

Note: For firmware download procedure, Warm Restart is recommended.

3. After few minutes, the device will automatically load the system hardware configuration.

The initial system configure screen with Loop brand appears.

```
';;'
 ;;            ,,,,,       ,,,,,    ,,, ,,,,
 ;;          ,;'   ';,   ,;'   ';,   ;;;'  ';,
 ;;         ,;'     ';, ,;'     ';,  ;;     ';,
 ;;         ;;       ;; ;;       ;;  ;;      ;;
 ;;       , ;;       ;; ;;       ;;  ;;,    ;;
 ;;      ,;  ;;     ;;   ;;     ;;   ;;';,,;'
,;;,,,,,;;;   ';,,,;'     ';,,,;'    ;;
                                     ;;
                T e l e c o m       ,;;,

Board_Slot=0
Press ACO key to load default configuration...3...2...1...
Init System Configuration.....Load Previous
Warm Restart...
Redundant board.....
End task ProcHbData......
evRedToPri happened during initialization......
Redundant->Primary takeover !
Testing and Init DM9000 - Ethernet controller...OK!
Init SCC1 - HDLC port ...v3myengine block: unable to install engine info

Init RS485 SCC4...
Trigger all Task...
Enable RS485 and Ethernet ...
Init Master Clock ...
```

4. Press (Z) Controller Reset to reset the redundant controller card. Select Redundant and key-in password (Loop default password: loop). Please wait for approximate 3 minutes for next screen to show up.

```
LOOP AM3440-A        === Reset Control Board ===      14:52:10 02/29/2012









>> Select ?   *Redundant  Primary    System

==>> Enter password : XXXXX
```

5. The screen shows the Redundant is synchronizing with Primary. Please wait.

```
                  Redundant is synchronizing with Primary...

         (don't insert any card during this synchronizing process)

...........................................................................
```

6. The screen will return to Controller Menu when the redundant Controller Reset function is complete. Now the software version has upgraded to V8.19.01.

```
LOOP AM3440-A            === Controller Menu ===        10:57:37 12/13/2011

Serial Number    : 123567                  Redundant Controller: Enabled
Hardware Version: Ver.J                    Start Time  : 10:48:31 12/13/2011
Software Version: V8.19.01 12/13/2011      Device Name: LOOP AM3440-A



[DISPLAY]                                  [SETUP]
C -> System Configuration                  S -> System Setup
B -> Clock source Configuration            M -> System Alarm Setup
Q -> Alarm Queue Summary                   W -> Firmware Transfer
I -> Information Summary                   V -> Store/Retrieve Configuration
R -> Redundant CTRL Information            K -> Clock source Setup
P -> Performance Report                    T -> Bit Error Rate Test

[LOG]                                      [MISC]
U -> Choose a Slot                         A -> Alarm Cut Off
F -> Log Off [SETUP],[MISC] Menu           X -> Clear Alarm Queue
O -> Log On  [SETUP],[MISC] Menu           Y -> Controller Return to Default
                                           Z -> Controller Reset


>>SPACE bar to refresh or enter a command ===>
```

6.2.10 Store/ Retrieve Configuration

Under the Controller Menu, press “V” to store or retrieve the current configuration as the following screen shows. Use TAB key to select STORE or RETRIEVE, press ENTER. The current selection will be highlighted by an asterisk (*).

Store Configuration:

```
LOOP AM3440-A          ===Store/Retrieve Configuration===    19:09:51 03/01/2001



>> Select ?   *STORE      RETRIEVE
```

Then the system will prompt the following message, shown in the bottom line. Enter “Y” to confirm the setting or “N” to abort.

```
LOOP AM3440-A          ===Store/Retrieve Configuration===    19:09:51 03/01/2001



>> Select ?   *STORE      RETRIEVE
>> Store Current Configuration ? [Y/N]
```

Press “Y” from the above screen, then enter password in the following screen. The default password is LOOP.

```
LOOP AM3440-A        ===Store/Retrieve Configuration===    16:43:26 02/20/2004









>> Select ?   *STORE      RETRIEVE
==>> Enter password : XXXX
```

Then press ENTER from the above screen, the configuration is saved.

```
   LOOP AM3440-A        ===Store/Retrieve Configuration===    16:43:26 02/20/2004 
   ==>> Saving...
```

Retrieve Configuration:

Use arrow keys to move the cursor at “RETRIEVE”, which will be highlighted by an asterisk (*).

```
LOOP AM3440-A          ===Store/Retrieve Configuration===    19:09:51 03/01/2001



>> Select ?    STORE     *RETRIEVE
```

Press ENTER from the above screen. Then press “Y” to retrieve last stored configuration, or “N” to abort it.

```
LOOP AM3440-A        ===Store/Retrieve Configuration===    16:45:31 02/20/2004









>> Select ?    STORE     *RETRIEVE
>> Retrieve Last Stored Configuration ? [Y/N]
```

Press “Y” from the above screen, then enter password in the following screen. The default password is LOOP.

```
LOOP AM3440-A        ===Store/Retrieve Configuration===    16:45:31 02/20/2004









>> Select ?    STORE     *RETRIEVE
==>> Enter password : XXXX
```

Then press ENTER from the above screen, the configuration is retrieved.

```
LOOP AM3440-A        ===Store/Retrieve Configuration===    16:45:31 02/20/2004









>> Select ?    STORE     *RETRIEVE
===> Retrieving ......
```

6.2.11 Clock Source Setup

■ **For Normal Clock Mode:**

Under the "Controller Setup" menu, press “A” to get in "System Setup (SYSTEM)" menu, as below screen shows. Use arrow keys to move the cursor at "Clock Mode" item and TAB key to choose "Normal" option.

```
LOOP AM3440-A           === System Setup (SYSTEM) ===      09:39:08 08/18/2010
ARROW KEYS: CURSOR MOVE, TAB: ROLL OPTIONS
[System]
Time/Date    : 09:39:08 08/18/2010
Device Name  : LOOP AM3440-A

[Network]
NI   EN  IPAddress       SubnetMask      Frame      LB Timer
LAN :ON  010.003.023.010 255.255.000.000 Ethernet
WAN :OFF 020.001.001.002 255.255.000.000 HDLC       00000001
Gateway Interface: LAN   Gateway IPAddr: 000.000.000.000
Inband Uses Slot: D      Note: Slot D port 4 can't use unframe mode!
[CONSOLE port]
Baud Rate    : 38400
Data Length  : 8-Bits
Stop Bit     : 1-Bit
Parity       : NONE
XON_XOFF     : XOFF

[TSI map]                                [Clock]
TSI Function   : 1:1(Bidirection)        Clock Mode   : Normal
Idle Signalling: 1010

<< Press ESC key to return to previous menu >>
```

Press ESC key from the above screen. Then press "Y" to confirm the new setting or "N" to abort.

```
LOOP AM3440-A           === System Setup (SYSTEM) ===      09:39:08 08/18/2010
ARROW KEYS: CURSOR MOVE, TAB: ROLL OPTIONS
[System]
Time/Date    : 09:39:08 08/18/2010
Device Name  : LOOP AM3440-A

[Network]
NI   EN  IPAddress       SubnetMask      Frame      LB Timer
LAN :ON  010.003.023.010 255.255.000.000 Ethernet
WAN :OFF 020.001.001.002 255.255.000.000 HDLC       00000001
Gateway Interface: LAN   Gateway IPAddr: 000.000.000.000
Inband Uses Slot: D       Note: Slot D port 4 can't use unframe mode!
[CONSOLE port]
Baud Rate    : 38400
Data Length  : 8-Bits
Stop Bit     : 1-Bit
Parity       : NONE
XON_XOFF     : XOFF

[TSI map]                                [Clock]
TSI Function   : 1:1(Bidirection)        Clock Mode   : Normal
Idle Signalling: 1010



>> Change configuration (Y/N)? (Note:to save,please use V-command)
```

Under the "Controller Menu", press “K” to do clock source setup. Then the following screen will show up.

```
LOOP AM3440-A       === System Setup (CLOCK-Normal Mode) ===14:14:07 09/09/2008
ARROW KEYS: CURSOR MOVE, TAB: ROLL OPTIONS


Master_Clk Source : SLOT_6 P1            Clock Hold-Over: ON
Second_Clk Source : INTERNAL
Current Clock     : MASTER_CLK
Clk_Recover_Mode  : AUTOMATIC
Clock Status      : NORMAL
Ext. Clock Type   : E1(75ohm)
Dual External Clock Protection : Disable









<< Press ESC key to return to previous menu >>
```

Configuration option:

Configuration		Option	Default
Clock	Master_Clk Source	INTERNAL, EXTERNAL, Line Interface[note1]	INTERNAL
	Second_Clk Source	INTERNAL, EXTERNAL, Line Interface[note1]	INTERNAL
	Current Clock	MASTER_CLK, SECOND_ CLK, INTERNAL	MASTER_CLK
	Clk_Recover_Mode	AUTOMATIC, MANUAL	MANUAL
	Ext. Clock Type	E1 (75 ohm), E1 (120 ohm), T1, 2048 KHz (75 ohm), 2048 KHz (120 ohm)	E1 (75 ohm)
	Dual External Clock Protection	Disable, Enable	Disable
	Clock Hold-Over	ON, OFF	OFF

Note:

1. Clock Hold-Over option is for 3E1 plug-in card only. It appears on VT100 screen when the controller hardware version **J** and software version 8.02.01 or newer version.
2. Clock Hold-Over mode is configured to OFF. The operation of system clock show as below. When the master clock loss occurs, the system clock will switch to secondary clock. When the secondary clock loss occurs, the system clock will switch to internal clock.

   Clock Hold-Over mode is configured to ON. The operation of system clock has shown as below. When the frequency accuracy of system clock is over ±198 ppm, the system clock will enter to Hold-Over mode. When the frequency accuracy of system clock is lower than ±198 ppm, the system clock will track the reference clock.

Note1: Line Interface includes Quad E1/T1, mini Quad E1, FOM, and 1FOMA card

■ **For SSM (Synchronous Status Message) Clock Mode:**

Under the "Controller Setup" menu, press “A” to get in "System Setup (SYSTEM)" menu, as below screen shows. Use arrow keys to move the cursor at "Clock Mode" item and TAB key to choose "SSM" option. **Note** that the SSM clock mode is only available for Quad E1 plug-in card and mini Quad E1 plug-in card.

```
LOOP AM3440-A           === System Setup (SYSTEM) ===      09:39:08 08/18/2010
ARROW KEYS: CURSOR MOVE, TAB: ROLL OPTIONS
[System]
Time/Date    : 09:39:08 08/18/2010
Device Name  : LOOP AM3440-A

[Network]
NI   EN  IPAddress       SubnetMask      Frame      LB Timer
LAN :ON  010.003.023.010 255.255.000.000 Ethernet
WAN :OFF 020.001.001.002 255.255.000.000 HDLC       00000001
Gateway Interface: LAN   Gateway IPAddr: 000.000.000.000
Inband Uses Slot: D   Note: Slot D port 4 can't use unframe mode!

[CONSOLE port]
Baud Rate    : 38400
Data Length  : 8-Bits
Stop Bit     : 1-Bit
Parity       : NONE
XON_XOFF     : XOFF

[TSI map]                                [Clock]
TSI Function   : 1:1(Bidirection)        Clock Mode   : SSM
Idle Signalling: 1010

<< Press ESC key to return to previous menu >>
```

Press ESC key from the above screen. Then press "Y" to confirm the new setting or "N" to abort.

```
LOOP AM3440-A           === System Setup (SYSTEM) ===      09:39:08 08/18/2010
ARROW KEYS: CURSOR MOVE, TAB: ROLL OPTIONS
[System]
Time/Date    : 09:39:08 08/18/2010
Device Name  : LOOP AM3440-A

[Network]
NI   EN  IPAddress       SubnetMask      Frame      LB Timer
LAN :ON  010.003.023.010 255.255.000.000 Ethernet
WAN :OFF 020.001.001.002 255.255.000.000 HDLC       00000001
Gateway Interface: LAN   Gateway IPAddr: 000.000.000.000
Inband Uses Slot: D   Note: Slot D port 4 can't use unframe mode!
[CONSOLE port]
Baud Rate    : 38400
Data Length  : 8-Bits
Stop Bit     : 1-Bit
Parity       : NONE
XON_XOFF     : XOFF

[TSI map]                                [Clock]
TSI Function   : 1:1(Bidirection)        Clock Mode   : SSM
Idle Signalling: 1010


>> Change configuration (Y/N)? (Note:to save,please use V-command)
```

Then exit from the above menu after keying "Y" to confirm the latest system configuration.
Go to Quad E1's Port Menu. Under the "Port Menu", press “P” to select the E1/T1 port and then press "S" to get in the "Unit System Setup" menu. Use arrow key to move the cursor at the "FDL" item, and TAB key to select "SSM" option.

```
SLOT 7 Quad-E1 PORT 1      === Port System Setup ===        16:51:00 04/25/2008
ARROW KEYS: CURSOR MOVE, TAB: ROLL OPTIONS

     FRAME      = ON
     CODE       = HDB3
     CRC        = ON
     RAI        = ON
     AIS        = FRAMED
     CAS        = ON
     SIGNALLING= CD=01
     CGA        = NORM
     OOS        = BUSY
     FDL        = SSM
     Sa_bit     = Sa4
     IDLE       = D5
     Protected = DISABLE
     Master     = ****
     INTF       = 75 Ohm



<< Press ESC key to return to previous menu >>
```

Then back to the "Controller Menu", press “K” to do clock source setup. Then the following screen will show up. This menu is allowed to set up first, second, and third clock sources. The "SLOT_9 P1" means port 1 of slot 9.

```
LOOP AM3440-A        === System Setup (CLOCK-SSM Mode) ===  17:04:38 08/18/2011
ARROW KEYS: CURSOR MOVE, TAB: ROLL OPTIONS


First   Clock Source : SLOT_9 P1          Clock Hold-Over: OFF
Second  Clock Source : EXTERNAL
Third   Clock Source : INTERNAL
Current Clock        : INTERNAL
Clock   Status       : NORMAL

Internal Clock SSM Message: B
External Clock SSM Message: 2
External Clock Type       : 2048KHz(75ohm)



<< Press ESC key to return to previous menu >>
```

Field	Setting Options
First Clock Source	NONE, INTERNAL, EXTERNAL, Line Interface[note]
Second Clock Source	NONE, INTERNAL, EXTERNAL, Line Interface[note]
Third Clock Source	NONE, INTERNAL, EXTERNAL, Line Interface[note]
Internal Clock SSM Message	Input 0~9, A-F SSM code (please refer to **SSM code for E1 Operation** table below)
External Clock SSM Message	SSM code (please refer to **SSM code for E1 Operation** table below)
External Clock Type	E1(75ohm), E1(120ohm), T1, 2048KHz(75ohm), 2048KHz(120ohm),

Note: Line Interface includes Quad E1/T1, mini Quad E1, FOM, and 1FOMA card

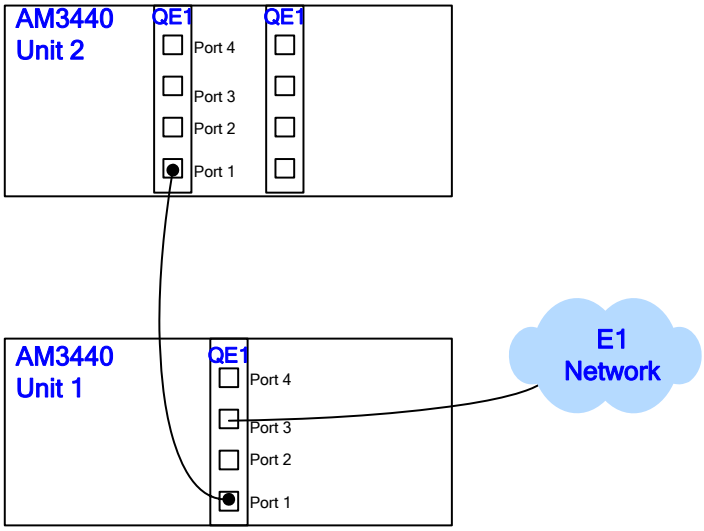

Unit 1 clock source setting
- First Clock Source: slot1 port3
- Second Clock Source: slot1 port 1
- Third Clock Source: internal

Unit 2 clock source setting
- First Clock Source: slot1 port1
- Second Clock Source: Internal
- Third Clock Source: None

The Unit 1 setting screen shown below, SLOT_1 P3 is the current clock and top priority for the quality level of its receive Sabit is "4". So the quality level of its transmit Sabit must be "F".

```
LOOP AM3440-A        === Clock Source Setup (SSM Mode) ===  11:09:22 10/04/2011

First   Clock Source : SLOT_1 P3        [ Tx_Sabit:  F , Rx_Sabit:  4 ]
Second  Clock Source : SLOT_1 P1        [ Tx_Sabit:  4 , Rx_Sabit:  F ]
Third   Clock Source : INTERNAL
Current Clock        : FIRST_CLK
Clock   Status       : NORMAL

Internal Clock SSM Message: 0
External Clock SSM Message: 0
Frame Pulse Period: 8001.2 Hz1(75ohm)

Clock Hold-Over: OFF


<< ESC key to return to previous menu, SPACE bar to refresh >>
```

The Unit 2 setting screen shown below, SLOT_1 P1 is the current clock and top priority for the quality level of its receive Sabit is "4". So the quality level of its transmit Sabit must be "F".

```
LOOP AM3440-A        === Clock Source Setup (SSM Mode) ===  11:12:36 10/04/2011

First   Clock Source : SLOT_1 P1        [ Tx_Sabit:  F , Rx_Sabit:  4 ]
Second  Clock Source : INTERNAL
Third   Clock Source : NONE
Current Clock        : FIRST_CLK
Clock   Status       : NORMAL

Internal Clock SSM Message: 0
External Clock SSM Message: 0
Frame Pulse Period: 8001.2 Hz1(75ohm)

Clock Hold-Over: OFF


<< ESC key to return to previous menu, SPACE bar to refresh >>
```

SSM code for E1 Operation

Quality Level	Description
0	Quality unknown (existing sync. network)
1	Reserved
2	Rec. G.811 (Traceable to PRS)
3	Reserved
4	SSU-A (Traceable to SSU type A, see G.812)
5	Reserved
6	Reserved
7	Reserved
8	SSU-B (Traceable to SSU type B, see G.812)
9	Reserved
A	Reserved
B	Synchronous Equipment Timing Source (SETS)
C	Reserved
D	Reserved
E	Reserved
F	Do not use for synchronization

6.2.12 Bit Error Rate Test

This menu is used to do bit error rate testing. Press "T" from the "Controller Menu".

- Note that this function is not available for these plug-in cards: Router, ATM Frame Relay, Dry Contact, FXS, FXO, E&M, and Magneto.
- For test channel, when a channel is set as "1", which means this channel is used to do bit error rate testing.
  There are two options are available: full or mapped. Note that only E1 and T1 plug-in cards support full channel. When this option, mapped, is selected for test channel, which means user should set up map first.
- For split mode, two options are available: (1) Send AIS - sending AIS to the other side, or (2) OFF - no sending AIS.
- For Period, if set to 0, means text is permanent. Other value will stop the test after time out.
- **2exp15-1:** 2^{15}-1
- **AIS:** Alarm Indication Signal
- **SES:** Severely Error Second
- **BER:** Bit Error Rate, BER = Bit Error/ (Elapsed Second - SES) x test channel x 64,000
- **ESR:** Error Second Ratio, ESR = Error Second/ Elapsed Second - SES
- **SESR:** Severely Error Second Ratio, SESR = SES/ Elapsed Second

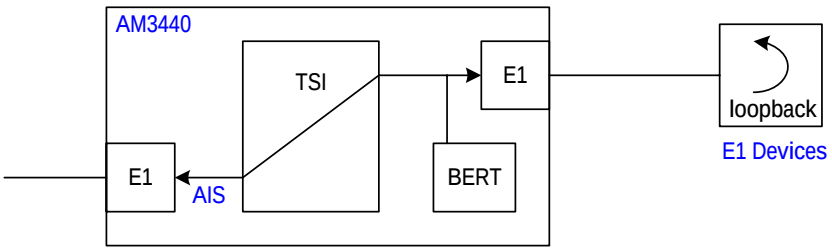


```
LOOP AM3440-A                    === BERT Test ===              09:55:21 06/02/2005
ARROW KEYS: CURSOR MOVE, TAB: ROLL OPTIONS

Test Slot     :  1    ( Quad-E1)
Test Port     : P1
Pattern Type  : 2exp15-1
Split Mode    : Send AIS
Test Channel  : full
User Pattern  : 00000000
Test Enable   : ENABLE

Test Channel   : 01111111111111111111111111111111 (31 channels)

Pattern: 2exp15-1   UNSYNC                Elapsed Second: 13
Bit Error      : 0                        BER  : 1.0
Error Seconds  : 0                        ESR  : 1.0
SES            : 13                       SESR : 1.0



<< ESC KEY : EXIT, LEFT ARROW : RESET ERROR, RIGHT ARROW : INJECT AN ERROR >>
```

6.2.13 Alarm Cut Off

Press "A" to show the alarm cut off screen.

```
>> Use TAB key to select unit, and ENTER key to clear alarm: ALL SLOTs
```

```
>> Clear alarm queue of ALL SLOTs - are you sure ? [Y/N]
```

```
>> Cut off alarm - are you sure (Y/N)?
```

6.2.14 Clear Alarm Queue

Press "X" to show the clear alarm queue screen.

```
=>> Clear Alarms (Y/N)?
```

6.2.15 Return to Default

Press "Y" to show the return to default screen.

```
>> Return to default - are you sure ? [Y/N]
```

6.2.16 Controller Reset

Press "Z" to show the system reset screen.

```
>> Select ?   *Redundant  Primary    Both
>> Reset – are you sure ? [Y/N]
```

6.3 DTE (V.35) Sub-Menu

Under the Controller Menu, press "U" to choose a slot for the DTE (V.35) port. Then the following Port Menu of DTE (V.35) port will show.

```
SLOT 7 DTE PORT 1              === Port Menu ===            10:40:07 07/06/2006

Version      : SW V2.01.02 04/27/2006




[DISPLAY]                                  [SETUP]
C -> DTE Configuration                     S -> System Setup
I -> DTE Status                            L -> Loopback Test
H -> Alarm History                         M -> Alarm Setup
                                           G -> Upgrade Firmware

[LOG]                                      [MISC]
F -> Log Off
O -> Log On                                B -> DTE board Return to Default
U -> Choose Other Slot                     Z -> Unit Reset
P -> Choose DTE Port
E -> Return to Main Menu



>>SPACE bar to refresh or enter a command ===>
```

6.3.1 DTE Configuration

By pressing "C", the unit setup menu is displayed as follows.

For V.35 DTE Interface:

```
SLOT 9 DTE PORT 1         === Unit Configuration ===       18:35:23 03/01/2001




[-------- LOCAL --------]
Channel   : 0
Rate      : 64KBps
Clock     : Normal
Data      : Normal
RTS       : Active
TTM       : Off
V.54      : Off
INTERFACE : V.35









<< ESC key to return to previous menu, SPACE bar to refresh >>
```

For V.36 DTE Interface:

```
SLOT 5 DTE PORT 1          === Unit Configuration ===       15:39:39 04/29/2004



[-------- LOCAL --------]
Channel   : 0
Rate      : 64KBps
Clock     : Normal
Data      : Normal
RTS       : Active
TTM       : Off
V.54      : Off
INTERFACE : V.36







<< ESC key to return to previous menu, SPACE bar to refresh >>
```

For EIA530/RS449 DTE Interface:

```
SLOT 11 DTE PORT 1         === Unit Configuration ===       15:41:54 04/29/2004



[-------- LOCAL --------]
Channel   : 0
Rate      : 64KBps
Clock     : Normal
Data      : Normal
RTS       : Active
TTM       : Off
V.54      : Off
INTERFACE : EIA530/RS449







<< ESC key to return to previous menu, SPACE bar to refresh >>
```

For X.21/V.11 DTE Interface:

```
SLOT 7 DTE PORT 1          === Unit Configuration ===       15:40:36 04/29/2004



[-------- LOCAL --------]
Channel   : 0
Rate      : 64KBps
Clock     : Normal
Data      : Normal
RTS       : Active
TTM       : Off
V.54      : Off
INTERFACE : X.21







<< ESC key to return to previous menu, SPACE bar to refresh >>
```

6.3.2 DTE Status

To enter the DTE status menu, press " I ". The following screen appears.

```
SLOT 9 DTE PORT 1             === Unit Status ===           18:35:27 03/01/2001


[------ LOCAL ------]
DTE-M1 existed : YES
RTS LOSS       : YES
EXT_CLK LOSS   : NO
DSR : YES
CTS : NO
DCD : YES
DTR : NO
RTS : NO

[Loopback Status]
DTE Loopback   : OFF
BERT           : OFF









<< ESC key to return to previous menu, SPACE bar to refresh >>
```

6.3.3 Alarm History

Press “H” to view the alarm history.

```
SLOT 9 DTE PORT 1                                          11:19:07 03/02/2001


[Port]  [State]  [Count]  [Alarm]
    1     OK         0    DISABLE
    2     OK         0    DISABLE
    3     OK         0    DISABLE
    4     OK         0    DISABLE
    5     OK         0    DISABLE
    6     OK         0    DISABLE









<< ESC to return to previous menu, SPACE to refresh, U key to change unit >>
```

6.3.4 System Setup

Press “S” to setup the system.

```
SLOT 9 DTE PORT 1        === Setup Configuration ===       18:35:35 03/01/2001
ARROW KEYS: CURSOR MOVE, TAB: ROLL OPTIONS



[-------- LOCAL --------]
Channel   : 0
Rate      : 64KBps
Clock     : Normal
Data      : Normal
RTS       : Active
TTM       : Off
V.54      : Off
INTERFACE : V.35









<< ESC key to previous menu, SPACE bar to another page >>
```

6.3.5 Loopback Test

To enter the Loopback and Test screen, press "L". The following screen appears.

```
SLOT 9 DTE PORT 1       === Unit Loopback and Test ===     18:35:39 03/01/2001
ARROW KEYS: CURSOR MOVE; ENTER KEY: ITEM SELECT; TAB,'`': NEXT/PREV UNIT

DTE Port 1

[TEST MENU]
DTE Loopback                          : *OFF  TO-DTE  TO-DS1
Send V.54 Activate Code to Far-End    : *DTE
Send V.54 Deactivate Code to Far-End  : *DTE
Send BERT                             : *OFF  ON









<< Press ESC key to return to previous menu >>
```

Note: Pattern type of Bert is 2^15-1.

6.3.6 Alarm Setup

To set up the alarm configuration, press "M". The following screen is displayed.

```
SLOT 9 DTE PORT 1             === Alarm Setup ===            18:35:43 03/01/2001
ARROW KEYS: CURSOR MOVE, TAB: ROLL OPTIONS


   [Port]      [Alarm]    [Relay]

 Unit   9# 1:  DISABLE    DISABLE
 Unit   9# 2:  DISABLE    DISABLE
 Unit   9# 3:  DISABLE    DISABLE
 Unit   9# 4:  DISABLE    DISABLE
 Unit   9# 5:  DISABLE    DISABLE
 Unit   9# 6:  DISABLE    DISABLE









<< Press ESC key to return to previous menu or save setup >>
```

6.3.7 Upgrade Firmware

To set up the alarm configuration, press "G". The following screen is displayed.

```
OOP AM3440-A              === Download Firmware ===        16:02:46 07/14/2006
ARROW KEYS: CURSOR MOVE, Please Input: nnn.nnn.nnn.nnn, BACKSPACE to edit


Bank 1 Firmware Ver. : V2.01.01 03/03/2006  (Good)
Bank 2 Firmware Ver. : V2.01.01 03/03/2006  (Good)
Working Firmware Bank: 1
TFTP Server IP       : 192.168.1.1
Firmware File Name   : hdsl_f.run









<< Press ESC key to return to previous menu >>
```

6.3.8 Clear Current Port Performance Data

To clear current port performance data, press "X".

```
SLOT 9 DTE PORT 1              === Port Menu ===            18:35:45 03/01/2001



=>> Clear Performance Data (Y/N)?
```

6.3.9 Return to Default

Press "Y" to return to default.

```
SLOT 9 DTE PORT 1              === Port Menu ===            18:35:45 03/01/2001



>> Return to default - are you sure ? [Y/N]
```

6.3.10 Reset Current DTE Board

To reset DTE board, press "Z".

```
SLOT 9 DTE PORT 1              === Port Menu ===            18:35:45 03/01/2001



=>> Reset Board 9 (Y/N)?
```

6.4 ATM Frame Relay Sub-Menu

Under the Controller Menu, press “U” to choose a slot for the ATM/ FR port. Then the following screen will show.

```
SLOT D  ATM/FR E1             === Port Menu ===            09:41:53 09/13/2002

Version      : SW V3.03 01/03/2002




[DISPLAY]                                [SETUP]
1 -> Unit 1-Hour Perf. Report            L -> Unit Loopback Setup
2 -> Unit 24-Hour Perf. Report           M -> Unit Alarm Setup
A -> Unit Statistics                     S -> Unit System Setup
C -> Unit Configuration                  X -> Unit Clear Alarm Queue & History
H -> Unit Alarm History                  K -> Unit Clear Performance Data
I -> Unit Status                         D -> Unit Upgrade Firmware
Q -> Unit Alarm Queue


[LOG]                                    [MISC]
U -> Choose a Port                       Y -> Unit Load Default Config
F -> Log Off [SETUP],[MISC] Menu         Z -> Unit Reset
O -> Log On  [SETUP],[MISC] Menu
E -> Return to Controller Main Menu


>>SPACE bar to refresh or enter a command ===>
```

6.4.1 1-Hour Performance Report

6.4.1.1. ATM Frame Relay - T1

Press "1" from the port menu, the following screen will show. To view ATM FR T1 port 1-hour performance report by selecting registers type, USER or LINE. The current selection will be highlighted by an asterisk (*).

```
SLOT D ATM/FR T1      === Port 1-Hour Perf. Report ===      17:17:44 07/21/2002



>> Select Register Type ? *USER  LINE
```

```
SLOT D ATM/FR T1       === Port 1-Hour Perf. Report ===      17:17:49 07/21/2002
USER
-- Valid Seconds in Current 15-Min Interval : 290 seconds
                                  (ES)   (UAS)  (BES)  (SES)  (CSS)  (LOFC)
   Current 15-Min Interval      : 0      0      0      0      0      0
   1st Nearest 15-Min Interval  : -----  -----  -----  -----  -----  -----
   2nd Nearest 15-Min Interval  : -----  -----  -----  -----  -----  -----
   3rd Nearest 15-Min Interval  : -----  -----  -----  -----  -----  -----
   4th Nearest 15-Min Interval  : -----  -----  -----  -----  -----  -----

-- Valid 15-Min Intervals in Current 24-Hour Interval: 0
                                  (ES)   (UAS)  (BES)  (SES)  (CSS)  (LOFC)
   Current 24-Hour Interval     : -----  -----  -----  -----  -----  -----









<< TAB key to show Statistics Report >>
<< ESC key to return to previous menu, SPACE key to refresh >>
```

```
SLOT D ATM/FR T1        === Port 1-Hour Stat. Report ===      17:18:05 07/21/2002
USER
-- Valid Seconds in Current 15-Min Interval : 290 seconds
                          (%AS)  (%EFS)   (%ES)  (%BES)  (%SES)  (%CSS) (%LOFC)
   Current 15-Min      :100.00% 100.00% 0.0000% 0.0000% 0.0000% 0.0000% 0.0000%
   1st Nearest 15-Min  :------- ------- ------- ------- ------- ------- -------
   2nd Nearest 15-Min  :------- ------- ------- ------- ------- ------- -------
   3rd Nearest 15-Min  :------- ------- ------- ------- ------- ------- -------
   4th Nearest 15-Min  :------- ------- ------- ------- ------- ------- -------

-- Valid 15-Min Intervals in Current 24-Hour Interval: 0
                          (%AS)  (%EFS)   (%ES)  (%BES)  (%SES)  (%CSS) (%LOFC)
   Current 24-Hour     :------- ------- ------- ------- ------- ------- -------









<< TAB key to show Performance Report >>
<< ESC key to return to previous menu, SPACE key to refresh >>
```

```
SLOT D ATM/FR T1         === Port 1-Hour Perf. Report ===      17:18:20 07/21/2002
LINE
-- Valid Seconds in Current 15-Min Interval : 321 seconds
                                (ES)   (UAS)  (BES)  (SES)  (CSS)  (LOFC)
   Current 15-Min Interval     : 0      0      0      0      0      0
   1st Nearest 15-Min Interval : -----  -----  -----  -----  -----  -----
   2nd Nearest 15-Min Interval : -----  -----  -----  -----  -----  -----
   3rd Nearest 15-Min Interval : -----  -----  -----  -----  -----  -----
   4th Nearest 15-Min Interval : -----  -----  -----  -----  -----  -----

-- Valid 15-Min Intervals in Current 24-Hour Interval: 0
                                (ES)   (UAS)  (BES)  (SES)  (CSS)  (LOFC)
   Current 24-Hour Interval    : -----  -----  -----  -----  -----  -----









<< TAB key to show Statistics Report >>
<< ESC key to return to previous menu, SPACE key to refresh >>
```

```
SLOT D ATM/FR T1         === Port 1-Hour Stat. Report ===      17:18:23 07/21/2002
LINE
-- Valid Seconds in Current 15-Min Interval : 321 seconds
                          (%AS)  (%EFS)   (%ES)  (%BES)  (%SES)  (%CSS) (%LOFC)
   Current 15-Min      :100.00% 100.00% 0.0000% 0.0000% 0.0000% 0.0000% 0.0000%
   1st Nearest 15-Min  :------- ------- ------- ------- ------- ------- -------
   2nd Nearest 15-Min  :------- ------- ------- ------- ------- ------- -------
   3rd Nearest 15-Min  :------- ------- ------- ------- ------- ------- -------
   4th Nearest 15-Min  :------- ------- ------- ------- ------- ------- -------

-- Valid 15-Min Intervals in Current 24-Hour Interval: 0
                          (%AS)  (%EFS)   (%ES)  (%BES)  (%SES)  (%CSS) (%LOFC)
   Current 24-Hour     :------- ------- ------- ------- ------- ------- -------









<< TAB key to show Performance Report >>
<< ESC key to return to previous menu, SPACE key to refresh >>
```

6.4.1.2. ATM Frame Relay - E1

To view ATM FR E1 port 1-hour performance report by selecting register type. The current selection will be highlighted by an asterisk (*).

```
SLOT D ATM/FR E1         === Port 1-Hour Perf. Report ===      16:29:59 07/24/2002
USER
-- Valid Seconds in Current 15-Min Interval : 16 seconds
                                  (ES)   (UAS)  (BES)  (SES)  (DM)   (CSS)
   Current 15-Min Interval     : 0      16     0      0      0      16
   1st Nearest 15-Min Interval : -----  -----  -----  -----  -----  -----
   2nd Nearest 15-Min Interval : -----  -----  -----  -----  -----  -----
   3rd Nearest 15-Min Interval : -----  -----  -----  -----  -----  -----
   4th Nearest 15-Min Interval : -----  -----  -----  -----  -----  -----

-- Valid 15-Min Intervals in Current 24-Hour Interval: 0
                                  (ES)   (UAS)  (BES)  (SES)  (DM)   (CSS)
   Current 24-Hour Interval    : -----  -----  -----  -----  -----  -----
   07/23/2002                  : -----  -----  -----  -----  -----  -----
   07/22/2002                  : -----  -----  -----  -----  -----  -----
   07/21/2002                  : -----  -----  -----  -----  -----  -----
   07/20/2002                  : -----  -----  -----  -----  -----  -----
   07/19/2002                  : -----  -----  -----  -----  -----  -----
   07/18/2002                  : -----  -----  -----  -----  -----  -----
   07/17/2002                  : -----  -----  -----  -----  -----  -----


<< TAB key to show Statistics Report >>
<< ESC key to return to previous menu, SPACE key to refresh >>
```

```
SLOT D  ATM/FR E1         === Port 1-Hour Stat. Report ===      16:30:04 07/24/2002
USER
-- Valid Seconds in Current 15-Min Interval : 16 seconds
                          (%AS)  (%EFS)   (%ES)  (%BES)  (%SES)   (%DM)  (%CSS)
   Current 15-Min      :0.0000% 0.0000% 0.0000% 0.0000% 0.0000% 0.0000% 100.00%
   1st Nearest 15-Min  :------- ------- ------- ------- ------- ------- -------
   2nd Nearest 15-Min  :------- ------- ------- ------- ------- ------- -------
   3rd Nearest 15-Min  :------- ------- ------- ------- ------- ------- -------
   4th Nearest 15-Min  :------- ------- ------- ------- ------- ------- -------

-- Valid 15-Min Intervals in Current 24-Hour Interval: 0
                          (%AS)  (%EFS)   (%ES)  (%BES)  (%SES)   (%DM)  (%CSS)
   Current 24-Hour     :------- ------- ------- ------- ------- ------- -------
   07/23/2002          :------- ------- ------- ------- ------- ------- -------
   07/22/2002          :------- ------- ------- ------- ------- ------- -------
   07/21/2002          :------- ------- ------- ------- ------- ------- -------
   07/20/2002          :------- ------- ------- ------- ------- ------- -------
   07/19/2002          :------- ------- ------- ------- ------- ------- -------
   07/18/2002          :------- ------- ------- ------- ------- ------- -------
   07/17/2002          :------- ------- ------- ------- ------- ------- -------


<< TAB key to show Performance Report >>
<< ESC key to return to previous menu, SPACE key to refresh >>
```

```
SLOT D  ATM/FR E1         === Port 1-Hour Perf. Report ===      16:30:16 07/24/2002
LINE
-- Valid Seconds in Current 15-Min Interval : 33 seconds
                                  (ES)   (UAS)  (BES)  (SES)  (DM)   (CSS)
   Current 15-Min Interval     : 0      33     0      0      0      33
   1st Nearest 15-Min Interval : -----  -----  -----  -----  -----  -----
   2nd Nearest 15-Min Interval : -----  -----  -----  -----  -----  -----
   3rd Nearest 15-Min Interval : -----  -----  -----  -----  -----  -----
   4th Nearest 15-Min Interval : -----  -----  -----  -----  -----  -----

-- Valid 15-Min Intervals in Current 24-Hour Interval: 0
                                  (ES)   (UAS)  (BES)  (SES)  (DM)   (CSS)
   Current 24-Hour Interval    : -----  -----  -----  -----  -----  -----
   07/23/2002                  : -----  -----  -----  -----  -----  -----
   07/22/2002                  : -----  -----  -----  -----  -----  -----
   07/21/2002                  : -----  -----  -----  -----  -----  -----
   07/20/2002                  : -----  -----  -----  -----  -----  -----
   07/19/2002                  : -----  -----  -----  -----  -----  -----
   07/18/2002                  : -----  -----  -----  -----  -----  -----
   07/17/2002                  : -----  -----  -----  -----  -----  -----
<< TAB key to show Statistics Report >>
<< ESC key to return to previous menu, SPACE key to refresh >>
```

```
SLOT D  ATM/FR E1         === Port 1-Hour Stat. Report ===      16:30:20 07/24/2002
LINE
-- Valid Seconds in Current 15-Min Interval : 33 seconds
                          (%AS)  (%EFS)   (%ES)  (%BES)  (%SES)   (%DM)  (%CSS)
   Current 15-Min      :0.0000% 0.0000% 0.0000% 0.0000% 0.0000% 0.0000% 100.00%
   1st Nearest 15-Min  :------- ------- ------- ------- ------- ------- -------
   2nd Nearest 15-Min  :------- ------- ------- ------- ------- ------- -------
   3rd Nearest 15-Min  :------- ------- ------- ------- ------- ------- -------
   4th Nearest 15-Min  :------- ------- ------- ------- ------- ------- -------

-- Valid 15-Min Intervals in Current 24-Hour Interval: 0
                          (%AS)  (%EFS)   (%ES)  (%BES)  (%SES)   (%DM)  (%CSS)
   Current 24-Hour     :------- ------- ------- ------- ------- ------- -------
   07/23/2002          :------- ------- ------- ------- ------- ------- -------
   07/22/2002          :------- ------- ------- ------- ------- ------- -------
   07/21/2002          :------- ------- ------- ------- ------- ------- -------
   07/20/2002          :------- ------- ------- ------- ------- ------- -------
   07/19/2002          :------- ------- ------- ------- ------- ------- -------
   07/18/2002          :------- ------- ------- ------- ------- ------- -------
   07/17/2002          :------- ------- ------- ------- ------- ------- -------


<< TAB key to show Performance Report >>
<< ESC key to return to previous menu, SPACE key to refresh >>
```

6.4.2 24-Hour Performance Report

6.4.2.1. ATM Frame Relay – T1

Press "2" from the port menu, the following screen will show. To view ATM FR T1 port 24-hour performance report by selecting register type and parameter. The current selection will be highlighted by an asterisk (*).

```
SLOT D ATM/FR T1        === Port 24-Hour Perf. Report ===     17:18:33 07/21/2002




>> Select Register Type ? *USER  LINE
>> Select Parameter ? *ES  UAS  BES  SES  CSS  LOFC  AS  EFS  BPV  ESF
```

```
SLOT D ATM/FR T1         === Port 24-Hour Perf. Report ===     17:18:44 07/21/2002
USER ES
-- Valid Seconds in Current 15-Min Interval : 345 seconds
-- Valid 15-Min Intervals in Current 24-Hour Interval: 0
                                 (ES)   (UAS)  (BES)  (SES)  (CSS)  (LOFC)
   Current 15-Min Interval     : 0      0      0      0      0      0
   Current 24-Hour Interval    : -----  -----  -----  -----  -----  -----

-- USER, ES, Last 96 15-Min Interval :
   01-08 > ----- ----- ----- ----- ----- ----- ----- -----
   09-16 > ----- ----- ----- ----- ----- ----- ----- -----
   17-24 > ----- ----- ----- ----- ----- ----- ----- -----
   25-32 > ----- ----- ----- ----- ----- ----- ----- -----
   33-40 > ----- ----- ----- ----- ----- ----- ----- -----
   41-48 > ----- ----- ----- ----- ----- ----- ----- -----
   49-56 > ----- ----- ----- ----- ----- ----- ----- -----
   57-64 > ----- ----- ----- ----- ----- ----- ----- -----
   65-72 > ----- ----- ----- ----- ----- ----- ----- -----
   73-80 > ----- ----- ----- ----- ----- ----- ----- -----
   81-88 > ----- ----- ----- ----- ----- ----- ----- -----
   89-96 > ----- ----- ----- ----- ----- ----- ----- -----

<< TAB key to show Statistics Report >>
<< ESC key to return to previous menu, SPACE key to refresh >>
```

```
SLOT D ATM/FR T1         === Port 24-Hour Stat. Report ===     17:18:48 07/21/2002
USER %ES
-- Valid Seconds in Current 15-Min Interval : 345 seconds
-- Valid 15-Min Intervals in Current 24-Hour Interval: 0
                          (%ES)  (%UAS)  (%BES)  (%SES)  (%CSS) (%LOFC)
   Current 15-Min      :0.0000% 0.0000% 0.0000% 0.0000% 0.0000% 0.0000%
   Current 24-Hour     :------- ------- ------- ------- ------- -------

-- USER, %ES, Last 96 15-Min Interval :
   01-08 > ------- ------- ------- ------- ------- ------- ------- -------
   09-16 > ------- ------- ------- ------- ------- ------- ------- -------
   17-24 > ------- ------- ------- ------- ------- ------- ------- -------
   25-32 > ------- ------- ------- ------- ------- ------- ------- -------
   33-40 > ------- ------- ------- ------- ------- ------- ------- -------
   41-48 > ------- ------- ------- ------- ------- ------- ------- -------
   49-56 > ------- ------- ------- ------- ------- ------- ------- -------
   57-64 > ------- ------- ------- ------- ------- ------- ------- -------
   65-72 > ------- ------- ------- ------- ------- ------- ------- -------
   73-80 > ------- ------- ------- ------- ------- ------- ------- -------
   81-88 > ------- ------- ------- ------- ------- ------- ------- -------
   89-96 > ------- ------- ------- ------- ------- ------- ------- -------

<< TAB key to show Performance Report >>
<< ESC key to return to previous menu, SPACE key to refresh >>
```

6.4.2.2. ATM Frame Relay – E1

Press "2" from the port menu, the following screen will show. To view ATM FR E1 port 24-hour performance report by selecting register type. The current selection will be highlighted by an asterisk (*).

```
SLOT D  ATM/FR E1         === Port 24-Hour Perf. Report ===     16:30:29 07/24/2002
USER ES
-- Valid Seconds in Current 15-Min Interval : 46 seconds
-- Valid 15-Min Intervals in Current 24-Hour Interval: 0
                                (ES)   (UAS)  (BES)  (SES)  (DM)   (CSS)
   Current 15-Min Interval     : 0      46     0      0      0      46
   Current 24-Hour Interval    : -----  -----  -----  -----  -----  -----

-- USER, ES, Last 96 15-Min Interval :
   01-08 > ----- ----- ----- ----- ----- ----- ----- -----
   09-16 > ----- ----- ----- ----- ----- ----- ----- -----
   17-24 > ----- ----- ----- ----- ----- ----- ----- -----
   25-32 > ----- ----- ----- ----- ----- ----- ----- -----
   33-40 > ----- ----- ----- ----- ----- ----- ----- -----
   41-48 > ----- ----- ----- ----- ----- ----- ----- -----
   49-56 > ----- ----- ----- ----- ----- ----- ----- -----
   57-64 > ----- ----- ----- ----- ----- ----- ----- -----
   65-72 > ----- ----- ----- ----- ----- ----- ----- -----
   73-80 > ----- ----- ----- ----- ----- ----- ----- -----
   81-88 > ----- ----- ----- ----- ----- ----- ----- -----
   89-96 > ----- ----- ----- ----- ----- ----- ----- -----

<< TAB key to show Statistics Report >>
<< ESC key to return to previous menu, SPACE key to refresh >>
```

```
SLOT D  ATM/FR E1         === Port 24-Hour Stat. Report ===     16:30:33 07/24/2002
USER %ES
-- Valid Seconds in Current 15-Min Interval : 46 seconds
-- Valid 15-Min Intervals in Current 24-Hour Interval: 0
                           (%ES)  (%UAS)  (%BES)  (%SES)   (%DM)  (%CSS)
   Current 15-Min      :0.0000% 100.00% 0.0000% 0.0000% 0.0000% 100.00%
   Current 24-Hour     :------- ------- ------- ------- ------- -------

-- USER, %ES, Last 96 15-Min Interval :
   01-08 > ------- ------- ------- ------- ------- ------- ------- -------
   09-16 > ------- ------- ------- ------- ------- ------- ------- -------
   17-24 > ------- ------- ------- ------- ------- ------- ------- -------
   25-32 > ------- ------- ------- ------- ------- ------- ------- -------
   33-40 > ------- ------- ------- ------- ------- ------- ------- -------
   41-48 > ------- ------- ------- ------- ------- ------- ------- -------
   49-56 > ------- ------- ------- ------- ------- ------- ------- -------
   57-64 > ------- ------- ------- ------- ------- ------- ------- -------
   65-72 > ------- ------- ------- ------- ------- ------- ------- -------
   73-80 > ------- ------- ------- ------- ------- ------- ------- -------
   81-88 > ------- ------- ------- ------- ------- ------- ------- -------
   89-96 > ------- ------- ------- ------- ------- ------- ------- -------

<< TAB key to show Performance Report >>
<< ESC key to return to previous menu, SPACE key to refresh >>
```

6.4.3 Port Statistics

Press "A" from the port menu, the screen will show as below. To view the statistics of ATM FR port by selecting statistics type. The current selection will be highlighted by an asterisk (*).

```
SLOT D  ATM/FR E1             === Port Statistics ===         17:23:15 07/21/2002




>> Select  Statistics  Type ?  *T1/E1 Line    FR Statistics   ATM Statistics
```

6.4.3.1. T1/E1 Line Availability

```
SLOT D  ATM/FR E1          === Port Line Availability ===      17:23:19 07/21/2002

-- Line Availability during Last 24-Hour:
   Valid Seconds      : 621 seconds
   Available Seconds  : 621 seconds
   Unavailable Seconds: 0 seconds
   Line Availability  : 100.0 %









<< ESC key to return to previous menu, SPACE key to refresh >>
```

6.4.3.2. Frame Relay Statistics

```
SLOT D  ATM/FR E1        === Port Frame Relay Statistics ===    17:23:33 07/21/2002



 Channel : 1
 PVC Number : 1      Total PVC : 1

<< Input PVC ( 0 for channel summary ) or ESC to previous menu >>
```

```
SLOT D  ATM/FR E1        === Port Frame Relay Statistics ===    17:23:33 07/21/2002


   Channel  :    1
   PVC      :    1
   DLCI     :  100


  [Received]                        [Transmitted]
   Bytes    :          0           Bytes       :          0
   Frames   :          0           Frames      :          0
   Discards :          0           Discards    :          0
   Drops    :          0           Drops       :          0



 Channel : 1
 PVC Number : 1      Total PVC : 1

<< ESC key to return to previous menu, SPACE key to refresh >>
```

6.4.3.3. ATM Statistics

```
SLOT D  ATM/FR E1            === Port ATM Statistics ===        17:23:53 07/21/2002

Total Connections :  37              [Bad HEC]:  0
    [VPI/VCI] [Rx_Frames][Tx_Frames][Congestion] [Bad CRC]  [Bad Len]
    ----------------------------------------------------------------
  1  12   101          0           0           0           0           0
  2  12   105          0           0           0           0           0
  3  12   106          0           0           0           0           0
  4  12   107          0           0           0           0           0
  5  12   108          0           0           0           0           0
  6  12   109          0           0           0           0           0
  7  12   110          0           0           0           0           0
  8  12   111          0           0           0           0           0
  9  12   112          0           0           0           0           0
 10  12   113          0           0           0           0           0
 11  12   114          0           0           0           0           0
 12  12   115          0           0           0           0           0
 13  12   116          0           0           0           0           0
 14  12   117          0           0           0           0           0
 15  12   118          0           0           0           0           0
 16  12   119          0           0           0           0           0


<< ESC key to return to previous menu, SPACE key to refresh >>
```

6.4.4 Unit Configuration

The interface setting displays the egress port type (E1 or T1).

The Protocol setting specifies the protocol on the line (ATM or Frame Relay).

The Channel Map setting specifies the type of traffic. "1" specifies layer 2 traffic, and "i" is idle. When the line carries ATM traffic, this setting cannot be modified.

To view the port configuration, press "C" from the port menu, the screen will show as below.

6.4.4.1. System Setup – ATM/ FR T1

To view the port configuration, press "C" from the port menu.

```
SLOT D  ATM/FR T1            === Port System Setup ===        17:35:29 03/23/2002


     FRAME      = ESF                    Interface  : T1
     CODE       = B8ZS                   Protocol   : ATM
     YEL        = ON                     Channel Map:
     AIS        = FRAMED                 [111111111111111111111111]
     INBAND     = OFF
     INTF       = LONG HAUL
     LBO        = 0 dB









<< ESC key to return to previous menu, SPACE bar to refresh >>
```

6.4.4.2. System Setup – ATM/ FR E1

To view the port configuration, press "C" from the port menu.

```
SLOT D  ATM/FR E1            === Port System Setup ===        15:56:08 03/27/2002


     FRAME      = ON                     Interface  : E1
     CODE       = HDB3                   Protocol   : ATM
     CRC        = ON                     Channel Map:
     RAI        = ON                     [111111111111111i111111111111111]
     AIS        = FRAMED
     CAS        = OFF
     FDL        = OFF
     Sa_bit     = Sa4
     INTF       = 120 Ohm









<< Press ESC key to return to previous menu >>
```

6.4.5 Alarm History

Press "H" from the port menu to view the alarm history.

6.4.5.1. Alarm History - FR to ATM

```
SLOT D  ATM/FR E1             === Port Alarm History ===        17:24:14 07/21/2002
LOCAL
[ALARM-TYPE]   [THRESHOLD]   [CURR-STATE]   [COUNT]   [ALARM]
RAI                             OK           0        ENABLE
AIS                             OK           0        ENABLE
LOS                             OK           0        ENABLE
LOF                             OK           0        ENABLE
BPV               10E-5         OK           0        ENABLE
ES                1             OK           0        ENABLE
UAS               1             OK           0        ENABLE
CSS               1             OK           0        ENABLE
ATM LOS                         OK           0        ENABLE
ATM AIS                         ALM          37       ENABLE
ATM RDI                         ALM          1        ENABLE
ATM LOC                         OK           0        ENABLE
FR LKD                          DISABLE      1        DISABLE





<< ESC key to return to previous menu, SPACE key to refresh >>
```

6.4.5.2. Alarm History - FR to FR

```
SLOT D  ATM/FR E1             === Port Alarm History ===        17:24:14 07/21/2002
LOCAL
[ALARM-TYPE]   [THRESHOLD]   [CURR-STATE]   [COUNT]   [ALARM]
YEL                             OK           0        ENABLE
AIS                             OK           0        ENABLE
LOS                             OK           1        ENABLE
LOF                             OK           1        ENABLE
BPV              10E-5          OK           0        ENABLE
ES               1              OK           0        ENABLE
UAS              1              ALM          1        ENABLE
CSS              1              OK           0        ENABLE
FR LKD                          ALM          2        ENABLE





<< ESC key to return to previous bar to refresh >>
```

6.4.6 Port Status

Press "I" from the port menu, the following screen will show. To view the port status for the ATM FR T1 interface by selecting ATM status type. The current selection will be highlighted by an asterisk (*).

NOTE: When Frame Relay is selected, ATM Status will be hidden.

```
SLOT D  ATM/FR T1                 === Port Status ===           17:24:32 07/21/2002




>> Select ATM Status Type ?   *T1/E1 Status     FR Status        ATM Status
```

6.4.6.1. T1/ E1 Status

```
SLOT D  ATM/FR T1                 === Port Status ===           17:24:37 07/21/2002


-- LINE --
   LOS     : NO
   LOF     : NO
   RCV AIS : NO
   RCV YEL : NO
   XMT AIS : NO
   XMT YEL : NO
   BPV ERROR COUNT : 0
   ES  ERROR COUNT : 0

-- TEST --
   PATTERN TRANSMITTED : OFF
   NEAR-END LOOPBACK   : OFF




<< ESC key to return to previous menu, SPACE key to refresh >>
```

6.4.6.2. Frame Relay Status

FR to ATM

```
SLOT D  ATM/FR T1          === Port Frame Relay Status ===      17:24:42 07/21/2002



      [CH]  [Link]              [CH]  [Link]
     -------------------       -------------------
        1    Up                  17    Inactive
        2    Inactive            18    Inactive
        3    Inactive            19    Inactive
        4    Inactive            20    Inactive
        5    Inactive            21    Inactive
        6    Inactive            22    Inactive
        7    Inactive            23    Inactive
        8    Inactive            24    Inactive
        9    Inactive            25    Inactive
       10    Inactive            26    Inactive
       11    Inactive            27    Inactive
       12    Inactive            28    Inactive
       13    Inactive            29    Inactive
       14    Inactive            30    Inactive
       15    Inactive            31    Inactive
       16    Inactive

<< ESC key to return to previous menu, SPACE key to refresh >>
```

FR to FR

```
SLOT D  ATM/FR T1          === Port Frame Relay Status ===      16:03:29 03/27/2002



      [CH]  [Link]              [CH]  [Link]
     -------------------       -------------------
      T1/E1  Up                  16    Inactive
        1    Down                17    Inactive
        2    Inactive            18    Inactive
        3    Inactive            19    Inactive
        4    Inactive            20    Inactive
        5    Inactive            21    Inactive
        6    Inactive            22    Inactive
        7    Inactive            23    Inactive
        8    Inactive            24    Inactive
        9    Inactive            25    Inactive
       10    Inactive            26    Inactive
       11    Inactive            27    Inactive
       12    Inactive            28    Inactive
       13    Inactive            29    Inactive
       14    Inactive            30    Inactive
       15    Inactive            31    Inactive

<< ESC key to return to previous menu, SPACE key to refresh >>
```

6.4.6.3. ATM Status

ATM Status – T1

```
SLOT D  ATM/FR T1              === Port ATM Status ===          17:24:50 07/21/2002

   ATM LINE :  SYNC

        [Active] [AIS] [RDI] [LOC]            [Active] [AIS] [RDI] [LOC]
   -------------------------------       -------------------------------
    1    Yes      Yes   Yes   No        21    Yes      Yes   Yes   No
    6    Yes      Yes   Yes   No        22    Yes      Yes   Yes   No
    7    Yes      Yes   Yes   No        23    Yes      Yes   Yes   No
    8    Yes      Yes   Yes   No        24    Yes      Yes   Yes   No
    9    Yes      Yes   Yes   No        25    Yes      Yes   Yes   No
   10    Yes      Yes   Yes   No        26    Yes      Yes   Yes   No
   11    Yes      Yes   Yes   No        27    Yes      Yes   Yes   No
   12    Yes      Yes   Yes   No        28    Yes      Yes   Yes   No
   13    Yes      Yes   Yes   No        29    Yes      Yes   Yes   No
   14    Yes      Yes   Yes   No        30    Yes      Yes   Yes   No
   15    Yes      Yes   Yes   No        31    Yes      Yes   Yes   No
   16    Yes      Yes   Yes   No        32    Yes      Yes   Yes   No
   17    Yes      Yes   Yes   No        33    Yes      Yes   Yes   No
   18    Yes      Yes   Yes   No        34    Yes      Yes   Yes   No
   19    Yes      Yes   Yes   No        35    Yes      Yes   Yes   No
   20    Yes      Yes   Yes   No        36    Yes      Yes   Yes   No

<< ESC key to return to previous menu, SPACE key to refresh >>
```

ATM Status – E1

```
SLOT D  ATM/FR E1                 === Port Status ===           15:46:07 07/24/2002


-- LINE --
   LOS     : YES
   LOF     : FAS
   RCV AIS : NO
   RCV RAI : NO
   XMT AIS : NO
   XMT RAI : RAI
   BPV ERROR COUNT : 0
   ES  ERROR COUNT : 0

-- TEST --
   PATTERN TRANSMITTED : OFF
   NEAR-END LOOPBACK   : OFF





<< ESC key to return to previous menu, SPACE key to refresh >>
```

6.4.7 Alarm Queue

Press "Q" form the port menu to view the alarm queue.

```
SLOT D  ATM/FR E1              === Unit Alarm Queue ===         17:24:57 07/21/2002
  1 -- Port   A: ATM RDI-------------------17:13:34 07/21/2002
  2 -- Port   A: ATM AIS-------------------17:13:34 07/21/2002
  3 -- Port   A: FR LKD--------------------17:13:33 07/21/2002

<< ESC key return to previous menu or SPACE bar to refresh >>
```

6.4.8 Loopback Test

6.4.8.1. ATM Frame Relay – T1

Under the port menu, press "L" to setup the loopback test for the ATM FR T1 interface.

```
SLOT D  ATM/FR T1            === Port Loopback Test ===       17:43:55 03/23/2002
ARROW KEYS : CURSOR MOVE , ENTER KEY : ITEM SELECT

- NEAR-END LOOPBACK   : *OFF  LOCAL  PLB  LLB

- SEND LOOPBACK ACTIVATE CODE TO FAR-END:
        *IN-BAND  AT&T-P  ANSI-P  ANSI-L
- SEND LOOPBACK DEACTIVATE CODE TO FAR-END:
        *IN-BAND  AT&T-P  ANSI-P  ANSI-L
- SEND TEST PATTERN:
        *OFF  QRSS-FULL  1-IN-8



- STATUS:

<< Press ESC key to return to previous menu >>
```

6.4.8.2. ATM Frame Relay – E1

Under the port menu, press "L" to setup the loopback test for the ATM FR E1 interface.

```
SLOT D  ATM/FR E1            === Port Loopback Test ===        15:44:49 07/24/2002
ARROW KEYS : CURSOR MOVE , ENTER KEY : ITEM SELECT

- NEAR-END LOOPBACK   : *OFF  LOCAL  PLB  LLB

- SEND LOOPBACK ACTIVATE CODE TO FAR-END:
        *PAYLOAD  LINE
- SEND LOOPBACK DEACTIVATE CODE TO FAR-END:
        *PAYLOAD  LINE
- SEND TEST PATTERN:
        *OFF  PRBS-FULL









- STATUS:

<< Press ESC key to return to previous menu >>
```

6.4.9 Alarm Setup

Under the port menu, press "M' to setup alarm.

6.4.9.1. Alarm Setup - FR to ATM

```
SLOT D  ATM/FR E1             === Port Alarm Setup ===        17:45:51 03/23/2002
ARROW KEYS: CURSOR MOVE, TAB: ROLL OPTIONS

[TYPE]    [THRESHOLD] [ALARM]
YEL                   ENABLE
AIS                   ENABLE
LOS                   ENABLE
LOF                   ENABLE
BPV          10E-5    ENABLE
ES             001    ENABLE
UAS            001    ENABLE
CSS            001    ENABLE
ATM LOS               ENABLE
ATM AIS               ENABLE
ATM RDI               ENABLE
ATM LOC               ENABLE
FR LKD                ENABLE





<< Press ESC key to return to previous menu >>
```

6.4.9.2. Alarm Setup - FR to FR

```
SLOT D  ATM/FR E1              === Port Alarm Setup ===         17:25:38 07/21/2002
ARROW KEYS: CURSOR MOVE, TAB: ROLL OPTIONS

[TYPE]    [THRESHOLD] [ALARM]
YEL                   ENABLE
AIS                   ENABLE
LOS                   ENABLE
LOF                   ENABLE
BPV          10E-5    ENABLE
ES             001    ENABLE
UAS            001    ENABLE
CSS            001    ENABLE
FR LKD                ENABLE





<< Press ESC key to return to previous menu >>
```

6.4.10 AM 3440 TSI MAP Setup

Before the ATM-FR card can be set up, the TSI map for the plug-in cards must be set up first. From the main controller menu, choose S - System Setup to do this.

Enter the required information where the cursor appears in the left-hand side column of the screen. In the example below three screens are shown in sequence to display the choices available to the user.

6.4.10.1. Map slot D (ATM/FR) to slot B (E1 card)

```
LOOP AM3440-A               === System Setup (MAP) ===       10:08:40 09/13/2002
ARROW KEYS: CURSOR MOVE, TAB: ROLL OPTIONS
MAP NO: MAP_1
            Target        ATM/FR                Source        E1    NON-CAS
Target      PO/TS D SL/PO TS PO/TS D SL/PO TS  PO/TS D SL/PO TS PO/TS D SL/PO TS
Slot  :  D  ===== ========== ===== ==========  ===== ========== ===== ==========
Port  :         1 d  B     1    17 d               1 d  D     1    17 d
T.S.  : 01      2 d  B     2    18 d               2 d  D     2    18 d
                3 d  B     3    19 d               3 d  D     3    19 d
                4 d  B     4    20 d               4 d  D     4    20 d
T.S.# : 04      5 d             21 d               5 d             21 d
Clear : No      6 d             22 d               6 d             22 d
d/v   : d       7 d             23 d               7 d             23 d
                8 d             24 d               8 d             24 d
                9 d             25 d               9 d             25 d
Source         10 d             26 d              10 d             26 d
Slot  :  B     11 d             27 d              11 d             27 d
Port  :        12 d             28 d              12 d             28 d
T.S.  : 01     13 d             29 d              13 d             29 d
               14 d             30 d              14 d             30 d
Confirm?Yes    15 d             31 d              15 d             31 d
               16 d                               16 d

<< Press ESC to return to Controller Setup menu, then Press D to active >>
```

6.4.10.2. Map slot D (ATM/FR) to slot 6 (V.35 card)

```
LOOP AM3440-A                 === System Setup (MAP) ===       10:08:40 09/13/2002
ARROW KEYS: CURSOR MOVE, TAB: ROLL OPTIONS
MAP NO: MAP_1
            Target        ATM/FR                Source        RTR
Target      PO/TS D SL/PO TS PO/TS D SL/PO TS  PO/TS D SL/PO TS PO/TS D SL/PO TS
Slot  :  D  ===== ========== ===== ==========  ===== ========== ===== ==========
Port  :         1 d  B     1    17 d               1 d  D     5    17 d
T.S.  : 05      2 d  B     2    18 d               2 d  D     6    18 d
                3 d  B     3    19 d               3 d  D     7    19 d
                4 d  B     4    20 d               4 d  D     8    20 d
T.S.# : 04      5 d  61    1    21 d               5 d             21 d
Clear : No      6 d  61    2    22 d               6 d             22 d
d/v   : d       7 d  61    3    23 d               7 d             23 d
                8 d  61    4    24 d               8 d             24 d
                9 d             25 d               9 d             25 d
Source         10 d             26 d              10 d             26 d
Slot  :  6     11 d             27 d              11 d             27 d
Port  : P1     12 d             28 d              12 d             28 d
T.S.  : 01     13 d             29 d              13 d             29 d
               14 d             30 d              14 d             30 d
Confirm?Yes    15 d             31 d              15 d             31 d
               16 d                               16 d             32 d

<< Press ESC to return to Controller Setup menu, then Press D to active >>
```

6.4.10.3. Map slot D (ATM/FR) to slot 1 (V.35 card)

```
LOOP AM3440-A                 === System Setup (MAP) ===       10:08:40 09/13/2002
ARROW KEYS: CURSOR MOVE, TAB: ROLL OPTIONS
MAP NO: MAP_1
            Target        ATM/FR                Source        V.35
Target      PO/TS D SL/PO TS PO/TS D SL/PO TS  PO/TS D SL/PO TS PO/TS D SL/PO TS
Slot  :  D  ===== ========== ===== ==========  ===== ========== ===== ==========
Port  :         1 d  B     1    17 d            1  1 d  D     9    17 d
T.S.  : 09      2 d  B     2    18 d            1  2 d  D    10    18 d
                3 d  B     3    19 d            1  3 d  D    11    19 d
                4 d  B     4    20 d            1  4 d  D    12    20 d
T.S.# : 04      5 d  A     1    21 d               5 d             21 d
Clear : No      6 d  A     2    22 d               6 d             22 d
d/v   : d       7 d  A     3    23 d               7 d             23 d
                8 d  A     4    24 d               8 d             24 d
                9 d  1  1  1    25 d               9 d             25 d
Source         10 d  1  1  2    26 d              10 d             26 d
Slot  :  1     11 d  1  1  3    27 d              11 d             27 d
Port  : P1     12 d  1  1  4    28 d              12 d             28 d
T.S.  : 01     13 d             29 d              13 d             29 d
               14 d             30 d              14 d             30 d
Confirm?Yes    15 d             31 d              15 d             31 d
               16 d                               16 d             32 d

<< Press ESC to return to Controller Setup menu, then Press D to active >>
```

6.4.10.4. Map slot D (ATM/FR) to HDLC (Inband Channel)

```
LOOP AM3440-A                 === System Setup (MAP) ===       10:08:40 09/13/2002
ARROW KEYS: CURSOR MOVE, TAB: ROLL OPTIONS
MAP NO: MAP_1
            Target        ATM/FR                Source        HDLC
Target      PO/TS D SL/PO TS PO/TS D SL/PO TS  PO/TS D SL/PO TS PO/TS D SL/PO TS
Slot  :  D  ===== ========== ===== ==========  ===== ========== ===== ==========
Port  :         1 d  B     1    17 d               1 d  D    13
T.S.  : 13      2 d  B     2    18 d
                3 d  B     3    19 d
                4 d  B     4    20 d
T.S.# : 01      5 d  A     1    21 d
Clear : No      6 d  A     2    22 d
d/v   : d       7 d  A     3    23 d
                8 d  A     4    24 d
                9 d  1  1  1    25 d
Source         10 d  1  1  2    26 d
Slot  : HD     11 d  1  1  3    27 d
Port  :        12 d  1  1  4    28 d
T.S.  : 01     13 d HD     1    29 d
               14 d             30 d
Confirm?Yes    15 d             31 d
               16 d

<< Press ESC to return to Controller Setup menu, then Press D to active >>
```

6.4.11 System Setup

6.4.11.1. ATM/ FR card Configuration

From the main system menu, press “U” to select the PORT, in this case, PORT D. Then from the PORT menu, press “S” for Unit System Setup. The following screen is shown. At the bottom, four setup choices are given. For initial setup, each of these four setup screens should be filled in. An asterisk will highlight the current selection (*). Use arrow keys to change selection. Press ENTER to activate.

```
SLOT D  ATM/FR E1            === Port System Setup ===        17:35:29 03/23/2002




>> Select ATM setup  Type ?     *T1/E1    CH MAP    FR MAN    CONN TAB
```

When the setup choice T1/E1 is entered. The following screen is shown.

The Interface setting displays the egress port type (E1 or T1).

The Protocol setting allows the user to specify the protocol on the line (ATM or Frame Relay).

The Channel Map, with 31 time slot positions, specifies the type of traffic. A “1” specifies presence of layer 2 traffic in that time slot, and an “i” indicates an idle time slot. For ATM traffic, this setting cannot be modified.

All of the E1 line settings, Frame, Code, CRC, and others, must match that of the ATM network settings.

NOTE: Although the following illustrations are for the E1 interface the procedure for the T1 interface are similar except for the 24 available time slots for T1 compared to 30 for E1.

6.4.11.2. System Specific to ATM Protocol

In the following, further setup will be for the ATM protocol. For Frame Relay protocol, see later sections.

Port System Setup

```
SLOT D  ATM/FR T1            === Port System Setup ===        17:35:29 03/23/2002
ARROW KEYS: CURSOR MOVE, TAB: ROLL OPTIONS

     FRAME      = ESF                    Interface  : T1
     CODE       = B8ZS                   Protocol   : ATM
     YEL        = ON                     Channel Map:
     AIS        = FRAMED                 [111111111111111111111111]
     INBAND     = OFF
     INTF       = LONG HAUL
     LBO        = 0 dB









<< ESC key to return to previous menu, SPACE bar to refresh >>
```

```
SLOT D  ATM/FR E1         === Port System Setup ===        10:24:07 09/13/2002
ARROW KEYS: CURSOR MOVE, TAB: ROLL OPTIONS

     FRAME      = ON                     Interface  : E1
     CODE       = HDB3                   Protocol   : ATM
     CRC        = ON                     Channel Map:
     RAI        = ON                     [1111111111111111i111111111111111]
     AIS        = FRAMED
     CAS        = OFF
     FDL        = OFF
     Sa_bit     = Sa4
     INTF       = 75 Ohm









<< Press ESC key to return to previous menu >>
```

Channel Map Setup

Select the CH_MAP item on the Port System Setup menu. Use this channel map to tell the ATM/FR card what time slots are combined to be a logical frame relay channel. The logical channel number can be 1 to 31. A 00 will indicate an idle time slot.

```
SLOT D  ATM/FR E1       === Port Channel Map Setup ===     10:24:58 09/13/2002
Please Input: 1~10, BACKSPACE to edit



  Time Slot  :  01 02 03 04 05 06 07 08 09 10 11 12 13 14 15 16
  FR Channel : [01 01 01 01 02 02 02 02 03 03 03 03 04 00 00 00]

  Time Slot  :  17 18 19 20 21 22 23 24 25 26 27 28 29 30 31
  FR Channel : [00 00 00 00 00 00 00 00 00 00 00 00 00 00 00]









<< Press ESC key to return to previous menu >>
```

Frame Relay Management Setup – FR to ATM

Select the FR_MAN item on the Port System Setup menu. Use this management setup to tell the protocol details of the ATM network. The logical channel number can be 1 to 31. The meanings of the parameters are as follows:

Column Heading	Options	Meaning
CH	1 to 31	Logical channel number
Active	YES NO	Activated by user An idle frame relay channel
Protocol	ITU ANSI	Using Q.933 Annex A protocol Using T1.617 Annex D protocol
Direction	User Network Bidirection	Acts as user side device (periodically issues polling messages to network side) Acts as network side device (waits for polling messages from user side) This channel can issue polling messages and respond to polling messages
T391 Polling Interval	5-30 seconds	The interval between Status Inquiry messages from user to network, else error counted.
T392 Response time	5-30 seconds	The max allowed interval between Status Inquiry and network response, else error counted.
N391 PVC Polling Interval	1-255 seconds	The interval between PVC Status Inquiry messages from user to network, else error counted.
N392 Error count	1-10	Determine service affecting condition by detecting N392 errors in the last N393 events.
N393 Error count	1-10	See N392

These parameters must be coordinated with the ATM network parameters.

Important The procedure for changing Port FR Management setting, which has been saved in the

Note: system, are:
1. Go to "Port Connection Table Setup" screen, as the 2nd screen shows,
2. Then change [CH] from 04 to 00, as the 3rd screen shows.
3. *Go back to "Port FR Management Setup" screen, as 1st screen shows, to change the previous setting.*

1st screen

```
SLOT D  ATM/FR E1      === Port FR Management Setup ===    10:25:33 09/13/2002
ARROW KEYS: CURSOR MOVE, TAB: ROLL OPTIONS

[CH] [Active]  [Protocol] [Direction]  [T391] [T392] [N391] [N392] [N393]
-------------------------------------------------------------------------
1     YES       FR-ITU     Network      10     15     006    03     04
2     YES       HDLC
3     YES       FR-ITU     Network      10     15     006    03     04
4     YES       HDLC
5     NO        FR-ITU     Network      10     15     006    03     04
6     NO        FR-ITU     Network      10     15     006    03     04
7     NO        FR-ITU     Network      10     15     006    03     04
8     NO        FR-ITU     Network      10     15     006    03     04
9     NO        FR-ITU     Network      10     15     006    03     04
10    NO        FR-ITU     Network      10     15     006    03     04
11    NO        FR-ITU     Network      10     15     006    03     04
12    NO        FR-ITU     Network      10     15     006    03     04
13    NO        FR-ITU     Network      10     15     006    03     04
14    NO        FR-ITU     Network      10     15     006    03     04
15    NO        FR-ITU     Network      10     15     006    03     04
16    NO        FR-ITU     Network      10     15     006    03     04


<< Press ESC key to return to previous menu >>
```

2nd screen

```
SLOT D  ATM/FR E1    === Port Connection Table Setup ===   10:25:48 09/13/2002
Please Input: 1~10, BACKSPACE to edit


                 [CH] [DLCI] [VPI] [VCI] [BR]       [IWK & Translation] [DE-CLP]

 index : 4        04  (HDLC)  103  00103 0064                            MAP
           ---------------------------------------------------------------------
           125     0      0     0      0    0<   0>    Network            MAP
           126     0      0     0      0    0<   0>    Network            MAP
           127     0      0     0      0    0<   0>    Network            MAP
           128     0      0     0      0    0<   0>    Network            MAP
             1     1     16   100    100   64<  64>    Network            MAP
             2     2      0   101    101  256<   0>    Network            0
             3     3     18   102    102   64<  64>    Network            MAP
             4     0      0     0      0    0<   0>    Network            MAP
             5     0      0     0      0    0<   0>    Network            MAP
             6     0      0     0      0    0<   0>    Network            MAP
             7     0      0     0      0    0<   0>    Network            MAP
             8     0      0     0      0    0<   0>    Network            MAP
             9     0      0     0      0    0<   0>    Network            MAP


<< Press ESC key to return to previous menu >>
```

3rd screen

```
SLOT D  ATM/FR E1    === Port Connection Table Setup ===   10:25:48 09/13/2002
Please Input: 1~10, BACKSPACE to edit


                 [CH] [DLCI] [VPI] [VCI] [BR]       [IWK & Translation] [DE-CLP]

 index : 4        00  (HDLC)  103  00103 0064                             MAP
           ---------------------------------------------------------------------
           125     0      0     0      0    0<   0>    Network            MAP
           126     0      0     0      0    0<   0>    Network            MAP
           127     0      0     0      0    0<   0>    Network            MAP
           128     0      0     0      0    0<   0>    Network            MAP
             1     1     16   100    100   64<  64>    Network            MAP
             2     2      0   101    101  256<   0>    Network            0
             3     3     18   102    102   64<  64>    Network            MAP
             4     0      0     0      0    0<   0>    Network            MAP
             5     0      0     0      0    0<   0>    Network            MAP
             6     0      0     0      0    0<   0>    Network            MAP
             7     0      0     0      0    0<   0>    Network            MAP
             8     0      0     0      0    0<   0>    Network            MAP
             9     0      0     0      0    0<   0>    Network            MAP


<< Press ESC key to return to previous menu >>
```

Connection Table Setup – FR to ATM

Select the CONN_TAB item on the Port System Setup menu. Use this management setup to link the connection table to that of the ATM network. The channel number can be 1 to 31. All the numerical entries must be coordinated with the ATM network. The meanings of the table columns are as follows:

Column Heading	Options	Meaning
CH	1-31	Logical channel number
DLCI	16-991	Data Link Connection Identifier within the channel
VPI	1-255	Virtual Path Identifier, from ATM
VCI	1-65535	Virtual Channel Identifier, from ATM
BR	1-1920	Bit Rate requested in Kilobits/sec for this VC
[Blank]	1-1920	Actual Bit Rate allocated I Kilobits/sec
IWK & Translation	Network SVC-Mode1 SVC-Mode 2 SVC-YES SVC-NO	Network inter-working, FRF.5 Service inter-working, FRF.8, Map FECN field in Frame Relay to ATM EFCI field Service inter-working, FRF.8, ATM EFCI is always set to “congestion net experienced” Translation column appears in table, see Translation below. Translation column appears in table, see Translation below.
	SVC-YES SVC-NO	Do translation between Frame Relay (FRF-3) and ATM (RFC1483) Forward encapsulations unaltered
DE-CLP	MAP 0 1	Maps content of DE (discard eligibility) in Frame Relay or CLP (cell loss probability) in ATM to CLP in ATM, DE in Frame Relay Regardless of contend of DE and CLP, set outgoing DE and CLP to constant 0. Regardless of contend of DE and CLP, set outgoing DE and CLP to constant 1.

```
SLOT D  ATM/FR E1    === Port Connection Table Setup ===   10:25:48 09/13/2002
Please Input: 1~10, BACKSPACE to edit


                 [CH] [DLCI] [VPI] [VCI] [BR]       [IWK & Translation] [DE-CLP]

 index : 4        04  (HDLC)  103  00103 0064                            MAP
           ---------------------------------------------------------------------
           125     0      0     0      0    0<   0>    Network            MAP
           126     0      0     0      0    0<   0>    Network            MAP
           127     0      0     0      0    0<   0>    Network            MAP
           128     0      0     0      0    0<   0>    Network            MAP
             1     1     16   100    100   64<  64>    Network            MAP
             2     2      0   101    101  256<   0>    Network            0
             3     3     18   102    102   64<  64>    Network            MAP
             4     0      0     0      0    0<   0>    Network            MAP
             5     0      0     0      0    0<   0>    Network            MAP
             6     0      0     0      0    0<   0>    Network            MAP
             7     0      0     0      0    0<   0>    Network            MAP
             8     0      0     0      0    0<   0>    Network            MAP
             9     0      0     0      0    0<   0>    Network            MAP


<< Press ESC key to return to previous menu >>
```

The entire connection table can be viewed by paging through the line numbers using the space bar. Each of the line numbers (line index) can be edited. The procedure is as follows.

(1) Move the cursor to the “index” number. Type in the line number followed by ENTER.

(2) Edit any of the entry by moving the cursor to that entry. For numbers, enter the new number followed by ENTER. For option choices, use TAB key to cycle through the available choices.

6.4.11.3. Setup Specific to FR-FR Protocol

In the following, setup will be for the FR-FR protocol. From the E1/T1 menu, select Frame Relay for the Protocol. Screen below illustrates that for the T1 interface.

Port System Setup

```
SLOT D  ATM/FR T1          === Port System Setup ===        22:50:06 07/15/2002
ARROW KEYS: CURSOR MOVE, TAB: ROLL OPTIONS

     FRAME      = ESF                    Interface  : T1
     CODE       = B8ZS                   Protocol   : Frame Relay
     YEL        = ON                     Channel Map:
     AIS        = FRAMED                 [111111111111111111111111]
     INBAND     = OFF
     INTF       = LONG HAUL
     LBO        = 0 dB









<< Press ESC key to return to previous menu >>
```

```
SLOT D  ATM/FR E1          === Port System Setup ===        10:16:36 09/13/2002
ARROW KEYS: CURSOR MOVE, TAB: ROLL OPTIONS

     FRAME      = ON                     Interface  : E1
     CODE       = HDB3                   Protocol   : Frame Relay
     CRC        = ON                     Channel Map:
     RAI        = ON                     [11111111111111111111111111111111]
     AIS        = FRAMED
     CAS        = OFF
     FDL        = OFF
     Sa_bit     = Sa4
     INTF       = 75 Ohm









<< Press ESC key to return to previous menu >>
```

Channel Map Setup

Select the CH_MAP item on the Port System Setup menu. Use this channel map to tell the ATM/FR card what time slots are combined to be a logical frame relay channel (FR channel). The logical FR channel number can be 1 to 31 (eg. FR 1 to FR 31). A 0 will indicate an idle time slot.

```
SLOT D  ATM/FR E1       === Port Channel Map Setup ===     10:17:28 09/13/2002
Please Input: 1~10, BACKSPACE to edit



  Time Slot  :  01 02 03 04 05 06 07 08 09 10 11 12 13 14 15 16
  FR Channel : [01 01 01 01 02 02 02 02 03 03 03 03 04 00 00 00]

  Time Slot  :  17 18 19 20 21 22 23 24 25 26 27 28 29 30 31
  FR Channel : [00 00 00 00 00 00 00 00 00 00 00 00 00 00 00]









<< Press ESC key to return to previous menu >>
```

Frame Relay Management Setup – FR to FR

Select the FR_MAN item on the Port System Setup menu. Use this management setup to tell the protocol details of the ATM network. The logical channel number can be 1 to 31. The meanings of the parameters are the same as for FR to ATM.

```
SLOT D  ATM/FR E1      === Port FR Management Setup ===    10:18:27 09/13/2002
ARROW KEYS: CURSOR MOVE, TAB: ROLL OPTIONS

[CH] [Active]  [Protocol] [Direction]  [T391] [T392] [N391] [N392] [N393]
-------------------------------------------------------------------------
T1/E1           FR-ITU     User         10     15     006    03     04
-------------------------------------------------------------------------
1     YES       FR-ITU     Network      10     15     006    03     04
2     YES       HDLC
3     YES       FR-ITU     Network      10     15     006    03     04
4     YES       HDLC
5     NO        FR-ITU     Network      10     15     006    03     04
6     NO        FR-ITU     Network      10     15     006    03     04
7     NO        FR-ITU     Network      10     15     006    03     04
8     NO        FR-ITU     Network      10     15     006    03     04
9     NO        FR-ITU     Network      10     15     006    03     04
10    NO        FR-ITU     Network      10     15     006    03     04
11    NO        FR-ITU     Network      10     15     006    03     04
12    NO        FR-ITU     Network      10     15     006    03     04
13    NO        FR-ITU     Network      10     15     006    03     04
14    NO        FR-ITU     Network      10     15     006    03     04
15    NO        FR-ITU     Network      10     15     006    03     04
16    NO        FR-ITU     Network      10     15     006    03     04
<< Press ESC key to return to previous menu >>
```

Connection Table Setup – FR to FR

Select the CONN_TAB item on the Port System Setup menu. Use this management setup to link the connection table to that of the Frame Relay network. The channel number can be 1 to 31. All the numerical entries must be coordinated with the Frame Relay network. The meanings of the table columns are as follows:

Column Heading	Options	Meaning
CH	1-31	Logical channel number
DLCI	16-991	Data Link Connection Identifier within the egress E1/T1 port
CIR	1-1920	Committed Information Rate
Bc	1-1920	Committed Burst Size
Be	1-1920	Excess Burst Size

DLCI: DLCI in egress E1/T1 port.
CIR-Be: Information rate committed on E1/T1 side.
( ): Actual allocated bandwidth.

```
SLOT D  ATM/FR E1    === Port Connection Table Setup ===   10:20:01 09/13/2002
Please Input: 1~10, BACKSPACE to edit


                 [CH  DLCI] <=> [DLCI   CIR         Bc    Be]

 index : 4        04 (HDLC)       019  0064       0064  0000
            ------------------------------------------------
           126     0     0          0     0(   0)    0     0
           127     0     0          0     0(   0)    0     0
           128     0     0          0     0(   0)    0     0
             1     1    16         16   256( 256)  256     0
             2     2     0         17   256( 256)  256     0
             3     3    18         18    64(  64)   64     0
             4     4     0         19    64(  64)   64     0
             5     0     0          0     0(   0)    0     0
             6     0     0          0     0(   0)    0     0
             7     0     0          0     0(   0)    0     0
             8     0     0          0     0(   0)    0     0
             9     0     0          0     0(   0)    0     0
            10     0     0          0     0(   0)    0     0


<< Press ESC key to return to previous menu, available DLCI : 16 ~ 991 >>
```

The procedure for modifying this table is the same as for the FR-ATM protocol.

6.4.12 Clear Alarm Queue and History

Press "X" to clear alarm queue and history, then enter "Y" or "N" to confirm it.

```
LOOP AM3440-A              === Controller Menu ===         18:03:32 10/08/2009

Serial Number   : 123526                Redundant Controller: Enabled
Hardware Version: Ver.J                 Start Time  : 11:25:29 10/08/2009
Software Version: V8.05.01 09/29/2009   Device Name: LOOP AM3440-A



[DISPLAY]                               [SETUP]
C -> System Configuration               S -> System Setup
B -> Clock source Configuration         M -> System Alarm Setup
Q -> Alarm Queue Summary                W -> Firmware Transfer
I -> Information Summary                V -> Store/Retrieve Configuration
R -> Redundant Board Information        K -> Clock source Setup
P -> Performance Report                 T -> Bit Error Rate Test

[LOG]                                   [MISC]
U -> Choose a Slot                      A -> Alarm Cut Off
F -> Log Off [SETUP],[MISC] Menu        X -> Clear Alarm Queue
O -> Log On  [SETUP],[MISC] Menu        Y -> Controller Return to Default
                                        Z -> Controller Reset



>> Clear alarm queue of PORT D - are you sure ? [Y/N]
```

6.4.13 Clear Performance Data

Under the port menu, press "K" to clear performance data.

```
SLOT D  ATM/FR E1              === Port Statistics ===          15:44:43 07/24/2002



>> Clear  Statistics  Type ?   *T1/E1 Line    FR Statistics   ATM Statistics
```

6.4.14 Upgrade Firmware

Under the port menu, press "D" to download firmware.

```
SLOT D  ATM/FR E1            === Download Firmware ===        17:27:03 07/21/2002
ARROW KEYS: CURSOR MOVE, BACKSPACE to edit, ESC to abort


Bank 1 Firmware Ver. : V2.04 07/10/2002  (Good)
Bank 2 Firmware Ver. : V2.04 06/07/2002  (Good)
Working Firmware Bank: 1
TFTP Server IP       : 140.132.1.156
Firmware File Name   : lv_s_f_c.run_____________________________________________


<< Press ESC key to return to previous menu >>
```

6.4.15 Unit Load Default Configuration

Under the port menu, press "Y" to download firmware. Then press “Y” or “N” to confirm the selection.

```
SLOT D  ATM/FR E1            === Download Firmware ===        17:27:03 07/21/2002



>> Return to default - are you sure ? [Y/N]
```

Note: When you load the default configuration, the current daughter card map will not be cleared.

6.4.16 Unit Reset

Press “Z” from Port Menu to reset the unit. Then press “Y” or “N” to confirm the selection.

```
SLOT D  ATM/FR E1            === Download Firmware ===        17:27:03 07/21/2002


Reset - are you sure ? [Y/N]
```

6.5 Mini Quad E1 Sub-Menu

Under the Controller Menu, press “U” to choose a slot for Quad E1 port. The screen will show as below. Then press “P” to choose mini Quad E1 port, press ENTER to get into the port menu.

```
SLOT A MQuad-E1 PORT 2        === Port Menu ===            10:28:12 10/27/2004

Version      : SW S1.C0 10/20/2004




[DISPLAY]                                [SETUP]
1 -> Unit 1-Hour Perf. Report            L -> Unit Loopback Setup
2 -> Unit 24-Hour Perf. Report           S -> Unit System Setup
A -> Unit Line Availability              K -> Unit Clear Performance Data
C -> Unit Configuration                  M -> Unit Alarm Setup
I -> Unit Status                         X -> Unit Clear Alarm Queue & History
H -> Unit Alarm History                  D -> Unit Upgrade Firmware
Q -> Unit Alarm Queue

[LOG]                                    [MISC]
U -> Choose Other Slot                   Y -> Unit Load Default Config
P -> Choose Port                         Z -> Unit Reset
F -> Log Off [SETUP],[MISC] Menu
O -> Log On  [SETUP],[MISC] Menu
E -> Return to Controller Main Menu


 >> Please input E1 Port (1-4), then press ENTER
```

This port menu is for mini Quad E1 Port 2.

```
SLOT A MQuad-E1 PORT 2        === Port Menu ===            10:28:12 10/27/2004

Version      : SW S1.C0 10/20/2004




[DISPLAY]                                [SETUP]
1 -> Unit 1-Hour Perf. Report            L -> Unit Loopback Setup
2 -> Unit 24-Hour Perf. Report           S -> Unit System Setup
A -> Unit Line Availability              K -> Unit Clear Performance Data
C -> Unit Configuration                  M -> Unit Alarm Setup
I -> Unit Status                         X -> Unit Clear Alarm Queue & History
H -> Unit Alarm History                  D -> Unit Upgrade Firmware
Q -> Unit Alarm Queue

[LOG]                                    [MISC]
U -> Choose Other Slot                   Y -> Unit Load Default Config
P -> Choose Port                         Z -> Unit Reset
F -> Log Off [SETUP],[MISC] Menu
O -> Log On  [SETUP],[MISC] Menu
E -> Return to Controller Main Menu

>>SPACE bar to refresh or enter a command ===>
```

6.5.1 Unit 1-Hour Performance Report

Press “1” from Port Menu to view the 1-hour performance report. Use TAB key to select register type, USER or LINE. The current selection will be highlighted by an asterisk (*).

```
SLOT A MQuad-E1 PORT 2        === Port Menu ===            10:28:12 10/27/2004




>> Select Register Type ? *USER  LINE
```

After pressing ENTER from the above screen, the following screen will show up.

```
SLOT A MQuad-E1 PORT 2=== Port 1-Hour Perf. Report ===     10:22:19 10/27/2004
LINE
-- Valid Seconds in Current 15-Min Interval : 754 seconds
                                 (ES)   (UAS)  (BES)  (SES)  (DM)   (CSS)
   Current 15-Min Interval     : 4      0      4      0      1      1
   1st Nearest 15-Min Interval : -----  -----  -----  -----  -----  -----
   2nd Nearest 15-Min Interval : -----  -----  -----  -----  -----  -----
   3rd Nearest 15-Min Interval : -----  -----  -----  -----  -----  -----
   4th Nearest 15-Min Interval : -----  -----  -----  -----  -----  -----

-- Valid 15-Min Intervals in Current 24-Hour Interval: 0
                                 (ES)   (UAS)  (BES)  (SES)  (DM)   (CSS)
   Current 24-Hour Interval    : -----  -----  -----  -----  -----  -----
   10/26/2004                  : -----  -----  -----  -----  -----  -----
   10/25/2004                  : -----  -----  -----  -----  -----  -----
   10/24/2004                  : -----  -----  -----  -----  -----  -----
   10/23/2004                  : -----  -----  -----  -----  -----  -----
   10/22/2004                  : -----  -----  -----  -----  -----  -----
   10/21/2004                  : -----  -----  -----  -----  -----  -----
   10/20/2004                  : -----  -----  -----  -----  -----  -----


<< TAB key to show Statistics Report >>
<< ESC key to return to previous menu, SPACE bar to refresh >>
```

Press TAB key to display the 1-hour statistics report, as below shows.

```
SLOT A MQuad-E1 PORT 2=== Port 1-Hour Stat. Report ===     10:22:48 10/27/2004
LINE
-- Valid Seconds in Current 15-Min Interval : 754 seconds
                           (%AS)  (%EFS)   (%ES)  (%BES)  (%SES)   (%DM)  (%CSS)
   Current 15-Min       :100.00% 99.469% 0.5305% 0.5305% 0.0000% 6.6666% 0.3921%
   1st Nearest 15-Min   :------- ------- ------- ------- ------- ------- -------
   2nd Nearest 15-Min   :------- ------- ------- ------- ------- ------- -------
   3rd Nearest 15-Min   :------- ------- ------- ------- ------- ------- -------
   4th Nearest 15-Min   :------- ------- ------- ------- ------- ------- -------

-- Valid 15-Min Intervals in Current 24-Hour Interval: 0
                           (%AS)  (%EFS)   (%ES)  (%BES)  (%SES)   (%DM)  (%CSS)
   Current 24-Hour      :------- ------- ------- ------- ------- ------- -------
   10/26/2004           :------- ------- ------- ------- ------- ------- -------
   10/25/2004           :------- ------- ------- ------- ------- ------- -------
   10/24/2004           :------- ------- ------- ------- ------- ------- -------
   10/23/2004           :------- ------- ------- ------- ------- ------- -------
   10/22/2004           :------- ------- ------- ------- ------- ------- -------
   10/21/2004           :------- ------- ------- ------- ------- ------- -------
   10/20/2004           :------- ------- ------- ------- ------- ------- -------


<< TAB key to show Performance Report >>
<< ESC key to return to previous menu, SPACE bar to refresh >>
```

6.5.2 Unit 24-Hour Performance Report

Press “2” from Port Menu to view the 24-hour performance report. Use TAB key to select register type, USER or LINE, press ENTER. Then move the cursor to select the desired parameter. The current selection will be highlighted by an asterisk (*).

```
SLOT A MQuad-E1 PORT 2=== Port 24-Hour Perf. Report ===    10:28:12 10/27/2004








>> Select Register Type ? *USER  LINE
>> Select Parameter ? *ES  UAS  BES  SES  CSS  DM  AS  EFS  BPV
```

After pressing ENTER from the above screen, the following screen will show up.

```
SLOT A MQuad-E1 PORT 2=== Port 24-Hour Perf. Report ===    10:28:12 10/27/2004
USER ES
-- Valid Seconds in Current 15-Min Interval : 869 seconds
-- Valid 15-Min Intervals in Current 24-Hour Interval: 20
                                 (ES)   (UAS)  (BES)  (SES)  (DM)   (CSS)
   Current 15-Min Interval     : 0      869    0      0      0      146
   Current 24-Hour Interval    : 0      18000  0      0      0      255

-- USER, ES, Last 96 15-Min Interval :
   01-08 > 0     0     0     0     0     0     0     0
   09-16 > 0     0     0     0     0     0     0     0
   17-24 > 0     0     0     0     ----- ----- ----- -----
   25-32 > ----- ----- ----- ----- ----- ----- ----- -----
   33-40 > ----- ----- ----- ----- ----- ----- ----- -----
   41-48 > ----- ----- ----- ----- ----- ----- ----- -----
   49-56 > ----- ----- ----- ----- ----- ----- ----- -----
   57-64 > ----- ----- ----- ----- ----- ----- ----- -----
   65-72 > ----- ----- ----- ----- ----- ----- ----- -----
   73-80 > ----- ----- ----- ----- ----- ----- ----- -----
   81-88 > ----- ----- ----- ----- ----- ----- ----- -----
   89-96 > ----- ----- ----- ----- ----- ----- ----- -----

<< TAB key to show Statistics Report >>
<< ESC key to return to previous menu, SPACE bar to refresh >>
```

Press TAB key to display the 1-hour statistics report, as below shows.

```
SLOT C MQuad-E1 PORT 1=== Port 24-Hour Stat. Report ===    13:42:16 10/27/2004
USER %ES
-- Valid Seconds in Current 15-Min Interval : 282 seconds
-- Valid 15-Min Intervals in Current 24-Hour Interval: 0
                          (%ES)  (%UAS)  (%BES)  (%SES)   (%DM)  (%CSS)
   Current 15-Min       :0.7092% 0.0000% 0.7092% 0.0000% 6.6666% 0.0000%
   Current 24-Hour      :------- ------- ------- ------- ------- -------

-- USER, %ES, Last 96 15-Min Interval :
   01-08 > ------- ------- ------- ------- ------- ------- ------- -------
   09-16 > ------- ------- ------- ------- ------- ------- ------- -------
   17-24 > ------- ------- ------- ------- ------- ------- ------- -------
   25-32 > ------- ------- ------- ------- ------- ------- ------- -------
   33-40 > ------- ------- ------- ------- ------- ------- ------- -------
   41-48 > ------- ------- ------- ------- ------- ------- ------- -------
   49-56 > ------- ------- ------- ------- ------- ------- ------- -------
   57-64 > ------- ------- ------- ------- ------- ------- ------- -------
   65-72 > ------- ------- ------- ------- ------- ------- ------- -------
   73-80 > ------- ------- ------- ------- ------- ------- ------- -------
   81-88 > ------- ------- ------- ------- ------- ------- ------- -------
   89-96 > ------- ------- ------- ------- ------- ------- ------- -------

<< TAB key to show Performance Report >>
<< ESC key to return to previous menu, SPACE bar to refresh >>
```

6.5.3 Unit Line Availability

Under Port Menu, press “A” to view the line availability as the following screen shows.

```
SLOT A MQuad-E1 PORT 2  === Port Line Availability ===     10:23:56 10/27/2004

-- Line Availability during Last 24-Hour:
   Valid Seconds      : 849 seconds
   Available Seconds  : 849 seconds
   Unavailable Seconds: 0 seconds
   Line Avaliability  : 100.0 %

<< ESC key to return to previous menu, SPACE bar to refresh >>
```

6.5.4 Unit Configuration

To view the unit configuration, press “C” from Port Menu, then the screen will show as below.

```
SLOT A MQuad-E1 PORT 2    === Port System Setup ===        10:24:14 10/27/2004


     FRAME      = ON
     CODE       = HDB3
     CRC        = ON
     RAI        = ON
     AIS        = FRAMED
     CAS        = OFF
     SIGNALLING= TRANS
     CGA        = NORM
     OOS        = BUSY
     FDL        = OFF
     Sa_bit     = Sa4
     IDLE       = D5
     Protected = DISABLE
     Master     = ****
     INTF       = 120 Ohm




<< ESC key to return to previous menu, SPACE bar to refresh >>
```

Note: FDL can be enabled in a maximum of 2 ports.

6.5.5 Unit Status

Press “I” from Port Menu, to show the screen of Unit Status as below.

```
SLOT A MQuad-E1 PORT 2        === Port Status ===           10:24:27 10/27/2004


-- LINE --
   LOS     : NO
   LOF     : NO
   RCV AIS : NO
   RCV RAI : NO
   XMT AIS : NO
   XMT RAI : NO
   BPV ERROR COUNT : 9407
   ES  ERROR COUNT : 4

-- TEST --
   PATTERN TRANSMITTED : OFF
   NEAR-END LOOPBACK   : OFF





<< ESC key to return to previous menu, SPACE bar to refresh >>
```

6.5.6 Unit Alarm History

To view the unit alarm history, press “H” from Port Menu.

```
SLOT A MQuad-E1 PORT 2    === Port Alarm History ===       10:24:44 10/27/2004
LOCAL
[ALARM-TYPE]   [THRESHOLD]   [CURR-STATE]   [COUNT]   [ALARM]
RAI                             OK           0        MAJOR
AIS                             OK           0        MAJOR
LOS                             OK           0        MAJOR
LOF                             OK           0        MAJOR
BPV               10E-5         OK           0        MAJOR
ES                1             OK           0        MAJOR
UAS               1             OK           0        MAJOR
CSS               1             OK           0        MAJOR









<< ESC key to return to previous menu, SPACE bar to refresh >>
```

6.5.7 Unit Alarm Queue

Under Port Menu, press “Q” to view the alarm queue as the following screen shows.

```
SLOT A MQuad-E1 PORT 2     === Unit Alarm Queue ===        10:25:10 10/27/2004
  1 -- Slot A : E1#4: MAJOR   : UAS remove--------------- 10:24:51 10/27/2004
  2 -- Slot A : E1#3: MAJOR   : UAS remove--------------- 10:24:51 10/27/2004
  3 -- Slot A : E1#4: MAJOR   : UAS---------------------- 10:24:49 10/27/2004
  4 -- Slot A : E1#3: MAJOR   : UAS---------------------- 10:24:49 10/27/2004
  5 -- Slot A : E1#4: MAJOR   : UAS remove--------------- 10:09:38 10/27/2004
  6 -- Slot A : E1#3: MAJOR   : UAS remove--------------- 10:09:38 10/27/2004
  7 -- Slot A : E1#4: MAJOR   : UAS---------------------- 10:09:37 10/27/2004
  8 -- Slot A : E1#3: MAJOR   : UAS---------------------- 10:09:37 10/27/2004
  9 -- Slot A : E1#2: MAJOR   : RAI remove--------------- 10:09:35 10/27/2004
 10 -- Slot A : E1#1: MAJOR   : RAI remove--------------- 10:09:35 10/27/2004
 11 -- Slot A : E1#4: MAJOR   : LOF---------------------- 10:09:31 10/27/2004
 12 -- Slot A : E1#4: MAJOR   : LOS---------------------- 10:09:31 10/27/2004
 13 -- Slot A : E1#3: MAJOR   : LOF---------------------- 10:09:31 10/27/2004
 14 -- Slot A : E1#3: MAJOR   : LOS---------------------- 10:09:31 10/27/2004
 15 -- Slot A : E1#2: MAJOR   : RAI---------------------- 10:09:31 10/27/2004
 16 -- Slot A : E1#1: MAJOR   : RAI---------------------- 10:09:31 10/27/2004





<< ESC key return to previous menu or SPACE bar to refresh >>
```

6.5.8 Unit Loopback Setup

Under Port Menu, press “L” to do Loopback Test, then the screen will show as below. Use arrow keys to move the cursor, press ENTER key to select items.

```
SLOT A MQuad-E1 PORT 2    === Port Loopback Test ===       10:25:24 10/27/2004
ARROW KEYS : CURSOR MOVE , ENTER KEY : ITEM SELECT

- NEAR-END LOOPBACK   : *OFF  LOCAL  PLB  LLB

- SEND LOOPBACK ACTIVATE CODE TO FAR-END:
        *PAYLOAD  LINE
- SEN LOOPBACK DEACTIVATE CODE TO FAR-END:
        *PAYLOAD  LINE
- SEND TEST PATTERN:
        *OFF  PRBS-FULL









- STATUS:

<< Press ESC key to return to previous menu >>
```

6.5.9 Unit System Setup

To setup unit system, press “S” from Port Menu, then the following screen will show up. Use arrow keys to move the cursor, TAB key to roll up options.

```
SLOT A MQuad-E1 PORT 2    === Port System Setup ===        10:26:20 10/27/2004
ARROW KEYS: CURSOR MOVE, TAB: ROLL OPTIONS

     FRAME     = ON
     CODE      = HDB3
     CRC       = ON
     RAI       = ON
     AIS       = FRAMED
     CAS       = OFF
     SIGNALLING= TRANS
     CGA       = NORM
     OOS       = BUSY
     FDL       = OFF
     Sa_bit    = Sa4
     IDLE      = D5
     Protected = DISABLE
     Master    = ****
     INTF      = 120 Ohm




<< Press ESC key to return to previous menu >>
```

Note: When user does Inband setup, slot D (port 4) cannot do unframed mode setup.

6.5.10 Unit Clear Performance Data

Press “K” from Port Menu to clear performance data, the screen will show as below. Press “Y” or “N” to confirm the commend.

```
SLOT A MQuad-E1 PORT 2        === Port Menu ===            10:26:45 10/27/2004

Version      : SW S1.C0 10/20/2004




[DISPLAY]                                [SETUP]
1 -> Unit 1-Hour Perf. Report            L -> Unit Loopback Setup
2 -> Unit 24-Hour Perf. Report           S -> Unit System Setup
A -> Unit Line Availability              K -> Unit Clear Performance Data
C -> Unit Configuration                  M -> Unit Alarm Setup
I -> Unit Status                         X -> Unit Clear Alarm Queue & History
H -> Unit Alarm History                  D -> Unit Upgrade Firmware
Q -> Unit Alarm Queue

[LOG]                                    [MISC]
U -> Choose Other Slot                   Y -> Unit Load Default Config
P -> Choose Port                         Z -> Unit Reset
F -> Log Off [SETUP],[MISC] Menu
O -> Log On  [SETUP],[MISC] Menu
E -> Return to Controller Main Menu

==>Clear performance data - are you sure [Y/N] ?
```

6.5.11 Unit Alarm Setup

To do alarm setup, press “M” from Port Menu, then the following screen will show up.

```
SLOT A MQuad-E1 PORT 2     === Port Alarm Setup ===        10:27:05 10/27/2004
ARROW KEYS: CURSOR MOVE, TAB: ROLL OPTIONS

[TYPE]    [THRESHOLD] [ALARM]
RAI                   MAJOR
AIS                   MAJOR
LOS                   MAJOR
LOF                   MAJOR
BPV          10E-5    MAJOR
ES             001    MAJOR
UAS            001    MAJOR
CSS            001    MAJOR









<< Press ESC key to return to previous menu >>
```

6.5.12 Unit Clear Alarm Queue & History

Under Port Menu, press “X” to clear alarm queue and history, then press “Y” or ”N” to confirm it.

```
SLOT A MQuad-E1 PORT 2        === Port Menu ===            10:27:33 10/27/2004

Version      : SW S1.C0 10/20/2004




[DISPLAY]                              [SETUP]
1 -> Unit 1-Hour Perf. Report          L -> Unit Loopback Setup
2 -> Unit 24-Hour Perf. Report         S -> Unit System Setup
A -> Unit Line Availability            K -> Unit Clear Performance Data
C -> Unit Configuration                M -> Unit Alarm Setup
I -> Unit Status                       X -> Unit Clear Alarm Queue & History
H -> Unit Alarm History                D -> Unit Upgrade Firmware
Q -> Unit Alarm Queue

[LOG]                                  [MISC]
U -> Choose Other Slot                 Y -> Unit Load Default Config
P -> Choose Port                       Z -> Unit Reset
F -> Log Off [SETUP],[MISC] Menu
O -> Log On  [SETUP],[MISC] Menu
E -> Return to Controller Main Menu

>> Clear alarm queue of SLOT A  - are you sure ? [Y/N]
```

6.5.13 Unit Upgrade Firmware

Press “D” to download firmware, then the screen will show as below. Use arrow keys to move the cursor and SPACE key to edit.

```
LOOP AM3440-A             === Download Firmware ===        10:27:49 10/27/2004
ARROW KEYS: CURSOR MOVE, Please Input: nnn.nnn.nnn.nnn, BACKSPACE to edit


Bank 1 Firmware Ver. : S1.C0 10/20/2004      (Good)
Bank 2 Firmware Ver. : S1.B0 10/20/2004      (Good)
Working Firmware Bank: 1
TFTP Server IP       : 000.000.000.000
Firmware File Name   :









<< Press ESC key to return to previous menu >>
```

6.5.14 Unit Load Default Configuration

Press “Y” to return to default, and then confirm it by pressing “Y” or “N”.

```
SLOT A MQuad-E1 PORT 2        === Port Menu ===            10:28:12 10/27/2004

Version      : SW S1.C0 10/20/2004




[DISPLAY]                              [SETUP]
1 -> Unit 1-Hour Perf. Report          L -> Unit Loopback Setup
2 -> Unit 24-Hour Perf. Report         S -> Unit System Setup
A -> Unit Line Availability            K -> Unit Clear Performance Data
C -> Unit Configuration                M -> Unit Alarm Setup
I -> Unit Status                       X -> Unit Clear Alarm Queue & History
H -> Unit Alarm History                D -> Unit Upgrade Firmware
Q -> Unit Alarm Queue

[LOG]                                  [MISC]
U -> Choose Other Slot                 Y -> Unit Load Default Config
P -> Choose Port                       Z -> Unit Reset
F -> Log Off [SETUP],[MISC] Menu
O -> Log On  [SETUP],[MISC] Menu
E -> Return to Controller Main Menu

>> Return to default - are you sure ? [Y/N]
```

Note: When you load the default configuration, the current daughter card map will not be cleared.

6.5.15 Unit Reset

Under Port Menu, press “Z” to reset unit. Press “Y” or “N” to confirm it.

```
SLOT A MQuad-E1 PORT 2        === Port Menu ===            10:28:12 10/27/2004

Version      : SW S1.C0 10/20/2004




[DISPLAY]                                [SETUP]
1 -> Unit 1-Hour Perf. Report            L -> Unit Loopback Setup
2 -> Unit 24-Hour Perf. Report           S -> Unit System Setup
A -> Unit Line Availability              K -> Unit Clear Performance Data
C -> Unit Configuration                  M -> Unit Alarm Setup
I -> Unit Status                         X -> Unit Clear Alarm Queue & History
H -> Unit Alarm History                  D -> Unit Upgrade Firmware
Q -> Unit Alarm Queue

[LOG]                                    [MISC]
U -> Choose Other Slot                   Y -> Unit Load Default Config
P -> Choose Port                         Z -> Unit Reset
F -> Log Off [SETUP],[MISC] Menu
O -> Log On  [SETUP],[MISC] Menu
E -> Return to Controller Main Menu

Reset - are you sure ? [Y/N]
```

7 Appendix A – Link Backup Function

7.1 Introduction

The **Link Backup Function** of AM3440 only applies to single E1/T1, FOM in mini slot: **A**, **B**, **C** and **D** and **1FOMA** in single slot **(1 to 12)**. The Link backup function supports 1:1 and 1 + 1 protection. This occurs when the system is set up so that a backup line (or lines in the case of 1: n) will be switched into service if the working line fails. In such a case, it must be switched in at each end of the line.

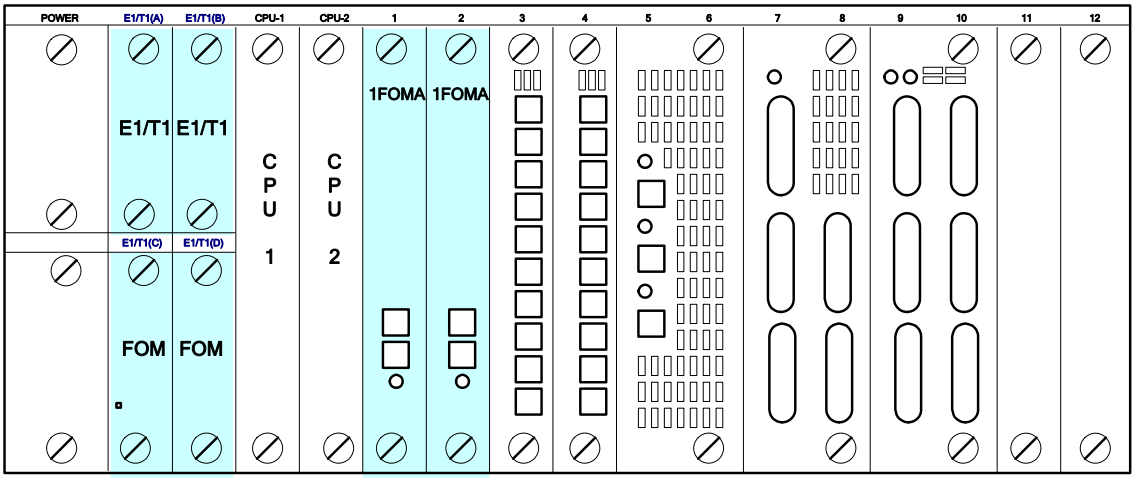

The illustration below is the Link Backup Function Schema.

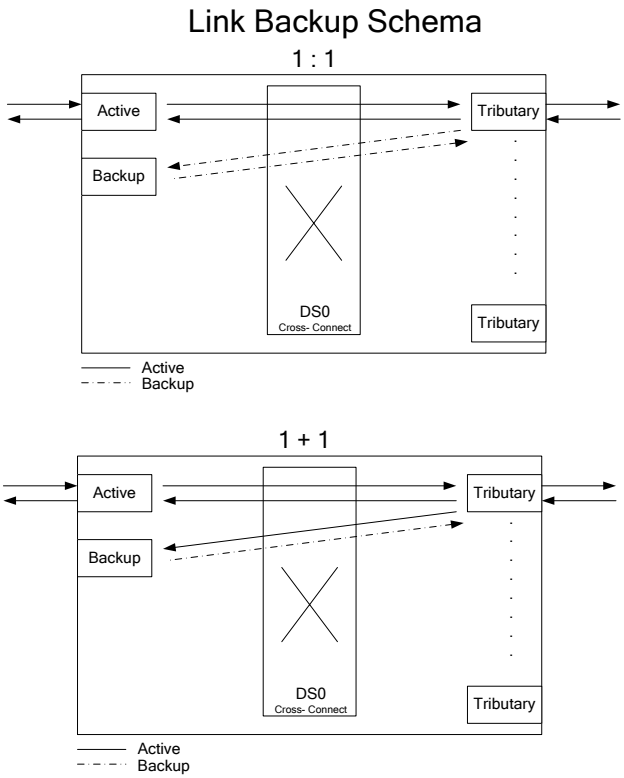

7.2 Physical Requirement

The physical configuration of a Link Backup Function should consist of one AM3440 unit and at least 2 E1/T1 cards for mini slot or at least 2 FOM cards: FOM card for mini slot or 1FOMA for single slot.

7.3 Setup Procedure

To configure the Link Backup Function in the follow procedure:

1. Same configure on both link backup cards
2. Configure Link Backup Function
3. Configure the TSI Map (see TSI Map setup in chapter 6)

Configure Link Backup Function

➢ **Command Path**	Controller Menu > (S) System Setup > (G) Link Backup Function
➢ **Description**	This function is to setup the 1:1 or 1+1 protection for single E1/T1, FOM cards in mini slots, and 1FOMA cards in single slot

1. From the System Setup (Backup) screen, choose to active/deactive for the backup function. Detail fields are explaining in the following table.
2. When the setting finished, press 'ESC' to save the configuration. A prompt will ask, "Are you sure? Y/N". Press 'Y'. You will automatically return to the Controller Setup screen.

Note: Both backup links shall have the same FRAME and CAS setting. Please return to controller menu and go to unit setup for setting.

```
LOOP AM3440-A           === System Setup (Backup) ===      15:14:36 08/18/2011
ARROW KEYS: CURSOR MOVE, TAB: ROLL OPTIONS

Backup function  :  ON(1+1)
Mode             :  non-revertible

Link        : Link-A  Link-B  Link-C  Link-D  Link-1  Link-2  Link-3  Link-4
Model       : FE1     FE1     FT1     FT1     QuadT1          QuadE1  QuadE1
===========   ==============================================================
Backup Link : Link-B  ------  Link-D  ------  ------  ------  ------  ------
Backup Fun  : OFF     OFF     OFF     OFF     OFF     OFF     OFF     OFF
Link Status : Normal  Normal  Normal  Normal  Normal  Normal  Normal  Normal
Force Switch:

Link        : Link-5  Link-6  Link-7  Link-8  Link-9  Link10  Link11  Link12
Model       : QuadE1  QuadE1  QuadE1  3E1
===========   ==============================================================
Backup Link : ------  ------  ------  ------  ------  ------  ------  ------
Backup Fun  : OFF     OFF     OFF     OFF     OFF     OFF     OFF     OFF
Link Status : Normal  Normal  Normal  Normal  Normal  Normal  Normal  Normal
Force Switch:

Note!! Please check both backup link have the same FRAME and CAS setting.
If protection type changed (ex: from 1:1 to 1+1), Please re-setup map!
```

Field	Setting Options	Default
Backup function	ON, OFF, ON (1+1), ON (1:1)	OFF
Mode	non-revertible, revertible	non-revertible
Backup Link	Choose the backup link	N/A

Configure the TSI Map

➢ **Command Path**	Main Menu > (S) System Setup > (C) TSI Map Setup
➢ **Description**	This function is to do the TSI Map Setup. Select the desired slot and port number for the mapping target. Next, select the starting timeslot number (T.S) and the timeslot amount (T.S #), and data or voice (d/v) for target. Also select the desired slot, port and starting timeslot number (T.S) for the mapping source. After configuration, select “Yes” for confirmation. Note: More detail, please see TSI Map Setup in Chapter 6

8 Appendix B – Inband Management

8.1 Introduction

The advantage of Inband Management is that saves money because management is through the line itself and a separate line is not needed for management functions. The disadvantage is that if you do anything to break the management channel, you cannot get it back.

In Inband Management, the management function is inserted into the working line. Using the Router card, management of a local, as well as one or more remote Loop products.

The diagram below illustrates inband application:

The user can use router card to share one or more 64 Kbps time slot for SNMP management. Each 64 Kbps time slot has enough bandwidth to manage four AM3440. Thus up to four AM3440 can share a single 64 Kbps bandwidth for SNMP management.

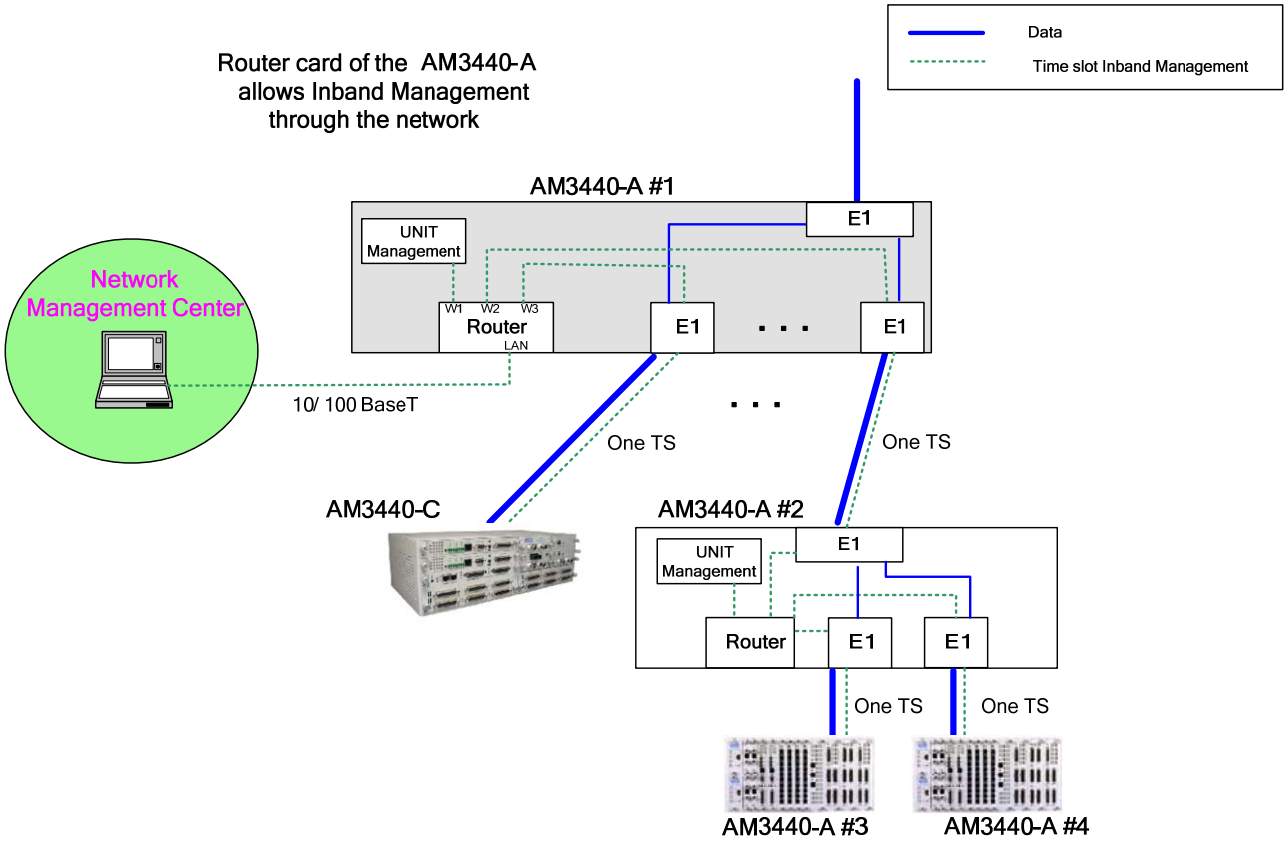

Figure 8-1 Inband Management Diagram

8.2 Inband Management Setup Procedure

To configure the Inband Management in the follow procedure.

1. Select the inband slot in Controller Menu > (S) System Setup
2. Set Trap IP Address and its community in Controller Menu > (S) System Setup > (S) SNMP Setup > (B) V1: Trap Setup
3. Set TSI Map in Controller Menu > (S) System Setup (C) TSI Map Setup.

Configure Inband Slot

Use arrow keys to move the cursor, and then set up the parameters in [Network] section. Then, choose slot D port 4 or slot 12 port 4 for inband management. When done, press ESC to return to the Controller Setup Menu.

```
LOOP AM3440-A          === System Setup (SYSTEM) ===      19:02:31 08/03/2011

[System]
Time/Date    : 19:02:32 08/03/2011
Device Name  : LOOP AM3440-A

[Network]
NI    EN  IPAddress        SubnetMask       Frame       LB Timer
LAN :OFF 000.000.000.000 000.000.000.000 Ethernet
WAN :OFF 000.000.000.000 000.000.000.000 HDLC        00000001
Gateway Interface: LAN   Gateway IPAddr: 000.000.000.000
Inband Uses Slot: D       Note: Slot D  port 4 can't use unframe mode!
[CONSOLE port]
Baud Rate     : 9600
Data Length   : 8-Bits
Stop Bit      : 1-Bit
Parity        : NONE
XON_XOFF      : XOFF

[TSI map]                                [Clock]
TSI Function    : 1:N(Multicast)         Clock Mode    : SSM
Idle Signalling: 1010

<< Press ESC key to return to previous menu >>
```

Inband Uses Slot: D Note: Slot D port 4 can't use unframe mode!

Inband Uses Slot: 12 Note: Slot 12 port 4 can't use unframe mode!

Note: To setup inband management, one 64K timeslot must be assigned for link to the controller (CTRL) through the internal cross-connect (XC). In-band timeslot (64Kbps) must be selected in either Slot D/Port4 or Slot 12/Port4.

Below are the plug-in cards that will be influenced due to the In-band timeslot limitation selected in either Slot D or Slot 12:

Slot	Plug-in Card
Slot D	FOM, MQE1, RTA
Slot 12	RTB, 4GH, TDMoE, QE1/QT1, 1FOMA

Although the framing option for each of the 4 ports of a Mini Quad E1, Quad E1/T1, FOM or 1FOMA interface card can be configured either "unframed" or "framed", provision for inband management imposes the following limitation. When one of these is selected for inband management, the Port 4 in that Slot, D or 12, must be configured to framed.

Chapter 8 Appendix B – Inband Management

The RTA, RTB, 4GH and TDMoE card supports up to 32 timeslots in normal condition. Due to the timeslot limitation, one 64K timeslot is already reserved in the port 4 of Slot D and Slot 12 for inband management. When these cards are plugged in either Slot D or Slot 12, only a maximum of 31 timeslots can be set.

Configure Trap IP address and its community

Controller Menu > (S) System Setup > (S) SNMP Setup > (B) V1: Trap Setup

```
LOOP AM3440-A                  === Trap and Community ===       11:39:15 08/02/2011
ARROW KEYS: CURSOR MOVE, BACKSPACE to edit, ESC to abort

Get Community  : public______           Set Community  : public

Trap IP 1      : 192.168.001.254        Community Name : public
Trap IP 2      : 000.000.000.000        Community Name : public
Trap IP 3      : 000.000.000.000        Community Name : public
Trap IP 4      : 000.000.000.000        Cummunity Name : public
Trap IP 5      : 000.000.000.000        Community Name : public

Trap system IP : WAN
Alarm/Trap Type: Vendor-Spec









<< Press ESC key to return to previous menu >>
```

Configure TSI Map

Controller Menu > (S) System Setup (C) TSI Map Setup.

Use arrow keys and the TAB key to set up the HDLC TSI map. You must select a time slot to use for inband management. In the example below we decided to map Time Slot 1 of Port A to Time Slot 1 of the IB (In-band) Port for this purpose. When you have completed your TSI map, press “ESC” to return to the Controller Setup menu. Then press “D” from that menu to activate the new map.

```
LOOP AM3440-A                    === System Setup (MAP) ===       16:47:28 08/02/2011
ARROW KEYS: CURSOR MOVE, TAB: ROLL OPTIONS
MAP NO: MAP_1
            Target     E1      NON-CAS          Source     In-Band
Target      PO/TS D SL/PO TS PO/TS D SL/PO TS  PO/TS D SL/PO TS PO/TS D SL/PO TS
Slot  :  A  ===== ========== ===== ==========  ===== ========== ===== ==========
Port  :         1 d IB     1    17 d               1 d  A     1
T.S.  : 01      2 d             18 d
                3 d             19 d
                4 d             20 d
T.S.# : 01      5 d             21 d
Clear : No      6 d             22 d
d/v   : d       7 d             23 d
                8 d             24 d
                9 d             25 d
Source         10 d             26 d
Slot  : IB     11 d             27 d
Port  :        12 d             28 d
T.S.  : 1      13 d             29 d
               14 d             30 d
Confirm?Yes    15 d             31 d
               16 d

<< Press ESC to return to Controller Setup menu, then Press D to active >>
```

Use arrow keys to move the cursor, and then set up the parameters in [Network] section. Then, choose slot D port 4 or slot 12 port 4 for inband management. When done, press ESC to return to the Controller Setup Menu.

Note: To setup inband management, one 64K timeslot must be assigned for link to the controller (CTRL) through the internal cross-connect (XC). In-band timeslot (64Kbps) must be selected in either Slot D/Port4 or Slot 12/Port4.

Below are the plug-in cards that will be influenced due to the In-band timeslot limitation selected in either Slot D or Slot 12:

Slot	Plug-in Card
Slot D	FOM, MQE1, RTA
Slot 12	RTB, 4GH, TDMoE, QE1/QT1

Although the framing option for each of the 4 ports of a Mini Quad E1, Quad E1/T1 or a FOM interface card can be configured either "unframed" or "framed", provision for inband management imposes the following limitation. When one of these is selected for inband management, the Port 4 in that Slot, D or 12, must be configured to framed.

The RTA, RTB, 4GH and TDMoE card supports up to 32 timeslots in normal condition. Due to the timeslot limitation, one 64K timeslot is already reserved in the port 4 of Slot D and Slot 12 for inband management. When these cards are plugged in either Slot D or Slot 12, only a maximum of 31 timeslots can be set.

```
LOOP AM3440-A           === System Setup (SYSTEM) ===      09:39:08 08/18/2010
ARROW KEYS: CURSOR MOVE, TAB: ROLL OPTIONS
[System]
Time/Date    : 09:39:08 08/18/2010
Device Name  : LOOP AM3440-A

[Network]
NI   EN  IPAddress       SubnetMask      Frame      LB Timer
LAN :ON  010.003.023.010 255.255.000.000 Ethernet
WAN :OFF 020.001.001.002 255.255.000.000 HDLC       00000001
Gateway Interface: LAN   Gateway IPAddr: 000.000.000.000
Inband Uses Slot: D       Note: Slot D port 4 can't use unframe mode!

[CONSOLE port]
Baud Rate    : 38400
Data Length  : 8-Bits
Stop Bit     : 1-Bit
Parity       : NONE
XON_XOFF     : XOFF

[TSI map]                                [Clock]
TSI Function   : 1:1(Bidirection)        Clock Mode   : Normal
Idle Signalling: 1010

<< Press ESC key to return to previous menu >>
```

From the Controller Setup menu, and press “B” to access Trap and Community. Here, set up the trap IP address and its community.

```
LOOP AM3440-A           === Trap and Community ===        10:59:31 12/08/2006
ARROW KEYS: CURSOR MOVE, BACKSPACE to edit, ESC to abort

Get Community  : public______           Set Community  : public

Trap IP 1      : 000.000.000.000        Community Name : public
Trap IP 2      : 000.000.000.000        Community Name : public
Trap IP 3      : 000.000.000.000        Community Name : public
Trap IP 4      : 000.000.000.000        Community Name : public
Trap IP 5      : 000.000.000.000        Community Name : public

Trap System IP:__________

<< Press ESC key to return to previous menu >>
```

Back to the Controller Setup menu, and press “C” to access the System Setup (MAP) screen. Use arrow keys and the TAB key to set up the HDLC TSI map. You must select a time slot to use for inband management. In the example below we decided to map Time Slot 1 of Port A to Time Slot 1 of the HDLC Port for this purpose. When you have completed your TSI map, press “ESC” to return to the Controller Setup menu. Then press “D” from that menu to activate the new map.

```
LOOP AM3440-A             === System Setup (MAP) ===       14:16:07 09/09/2011
ARROW KEYS: CURSOR MOVE, TAB: ROLL OPTIONS
MAP NO: MAP_1
            Target     E1      NON-CAS         Source     In-Band
Target      PO/TS D SL/PO TS PO/TS D SL/PO TS  PO/TS D SL/PO TS PO/TS D SL/PO TS
Slot  :  A  ===== ========== ===== ==========  ===== ========== ===== ==========
Port  :         1 d IB     1    17 d               1 d  A     1
T.S.  : 01      2 d             18 d
                3 d             19 d
                4 d             20 d
T.S.# : 01      5 d             21 d
Clear : No      6 d             22 d
d/v   : d       7 d             23 d
                8 d             24 d
                9 d             25 d
Source         10 d             26 d
Slot  : IB     11 d             27 d
Port  :        12 d             28 d
T.S.  : 1      13 d             29 d
               14 d             30 d
Confirm?Yes    15 d             31 d
               16 d

<< Press ESC to return to Controller Setup menu, then Press D to active >>
```

9 Appendix C –QDS1 1:1 Protection

9.1 Introduction

The QDS1 1:1 protection function only applies to Quad E1/T1, Mini Quad E1, and TDMoE/Quad E1/T1 cards. Apply to QDS1 1:1 protection function; two plug-in cards must be inserted next to each other as a pair so that one plug-in card can be used to protect the other.

NOTE:

1. A pair of Quad E1/T1, Mini Quad E1, and TDMoE/Quad E1/T1 cards should be installed in one of the following slot groupings: [1&2], [3&4], [5&6], [7&8], [9&10] or [11&12]. The pair of cards should not be installed in the following groupings: [2&3], [4&5], [6&7], [8&9] or [10&11].
2. Before removing any card from AM3440 shelf, please make sure its connecting cables are removed from Quad E1 plug-in card first.
3. This chapter introduces only 1:1 protection function for a pair of Quad E1/T1. For 1+1 protection function of TEMoE and Quad E1/T1, please refer to the Appendix B of the TDMoE card User's Manual.

There are two types of protection available for the Quad E1 card. They are Circuit Protection and Line Protection. Circuit Protection requires the use of a Loop-VV Y-BOX. This Y-Box is specifically designed to provide a 1:1 circuit protection function for the Quad E1 card of the Loop-AM 3440 shelf. Line Protection does not require the use of a Y-Box.

Each Quad E1 card has four ports. The ports of one card protect the corresponding ports of the other card. For example, Port 1 of the protection card protects Port 1 of the other card. Similarly, Port 2 of the protection card protects Port 2 of the other card, etc.

To configure the QDS1 1:1 Protection function in the follow procedure.

1. Select the QDS1 1:1 Protection function in Controller Menu > (S) System Setup > (Q) QDS1 1:1 Protection
2. Set TSI Map in Controller Menu > (S) System Setup (C) TSI Map Setup

Note: You **MUST** set the protection first and then set the TSI map.

9.2 Setting up Circuit Protection

9.2.1 Connecting the Y-Box to the AM 3440 Shelf

There are two Y-Box types available for the AM 3440. One has BNC connectors and can handle up to 4 lines. The other has RJ 48C connectors and can handle up to 16 lines. For every four lines you wish to protect you must have one pair of Quad E1 or one pair of mini Quad E1 plug-in cards in the AM 3440. The following setup is using Quad E1 card for demonstration.

If you are using the BNC type Y BOX, use BNC cables to connect it to the AM 3440 as shown in Figure 9-1, below. For illustration purposes, only Port 1 is protected in this sample diagram. To protect other ports you must connect them in a similar manner.

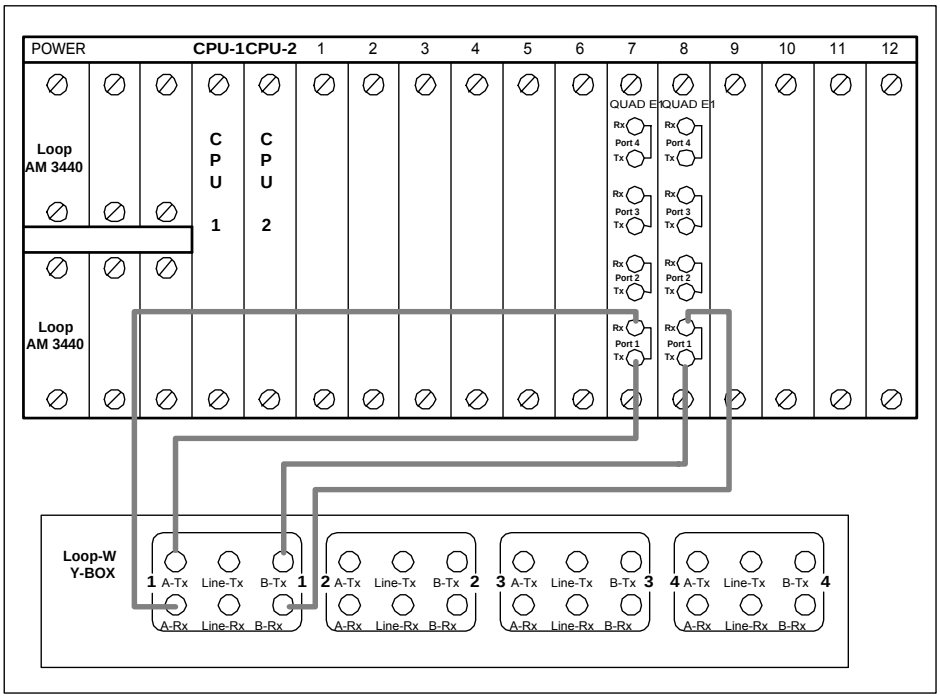

Figure 9-1 Connection for AM3440 and Y-BOX with BNC connectors

If you are using the RJ48C type Y BOX, connect it to the AM 3440 as shown in Figure 9-2 below. For illustration purposes, only Port 9 is protected in this sample diagram. To protect other ports you must connect them in a similar manner.

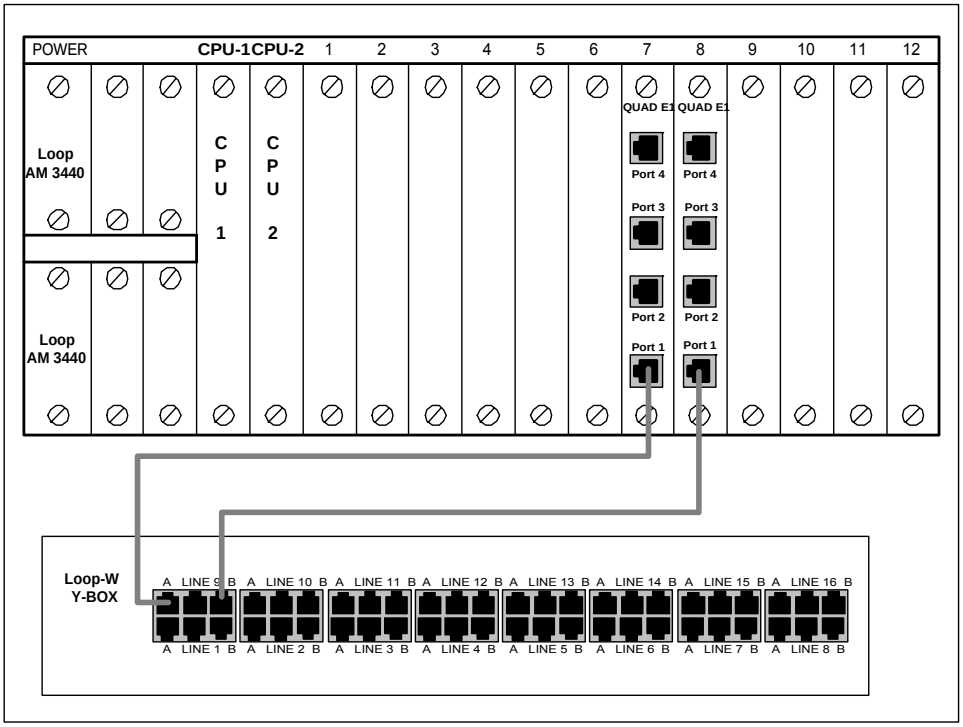

Figure 9-2 Connection for AM3440 and Y-BOX with RJ48C connectors

NOTE: Cable connections between the RJ 48C connectors on the Y-Box and RJ48C connectors on

the Loop-AM 3440 must be parallel, ie. Pin #1 → Pin #1, Pin #2→ Pin #2, Pin #4→ # 4, and Pin #5 → # 5.

9.2.2 Quad E1 card Location

In our sample setup we installed a Quad E1 card in Slot #9. We will use it as a Master. It will be the working line. We also installed a Quad E1 card in Slot #10. It will be used as a Slave and will perform the protection function.

9.2.3 Setting up a VT-100 Monitor

Use a DB9 cable to connect the front Console Port of the Loop-Am 3440 to either COM Port 1 or COM Port 2 of the PC you are using as a VT-100 monitor. It doesn't matter which Com Port you connect to.

NOTE: Many newer PCs use USB Ports. If your computer has a USB port rather than COM ports you will need to purchase a commercially available PC USB to DB9 conversion cable. These cables come with software which, when loaded in a PC, will allow you to send keyboard commands through the PC's USB Port to the DB9 Console Port of the AM3440.

9.2.4 Step by Step Quad E1 Plug-in card Circuit Protection Setup

The sample screens below provide step by step instructions for setting up Quad E1 Circuit Protection. In our sample setup we installed Quad E1 cards in slot #9 and slot #10. The card in slot #9 will be working slot, and slot 10 will be standing by.

Go to Controller Menu > (S) System Setup > (Q) QDS1 1:1 Protection, select Setup and press Enter.
The Setup menu is to setup the protection modes for each protection pair and ports.

```
LOOP AM3440-A                    === QDS1 1:1 Protection ===       17:42:06 08/02/2011


>> Select ? *Setup      Status
```

On the Setup Screen, there are four selection for the user to setup such as disable, circuit, line-non revertive line-revertive, 1+1 non revertive, and 1+1 revertive. The sample below is to setup the port 1 of slot 9: 10 as **circuit** protection. It means Slot 9 port 1 is protection working port and slot 10 port 1 as backup in Circuit mode.

```
LOOP AM3440-A                    === QDS1 1:1 Protection ===       16:57:54 08/02/2011
ARROW KEYS: CURSOR MOVE, TAB: ROLL OPTIONS
Protect Pair(Master:Backup)     Port 1       Port 2       Port 3       Port 4
==========================  ===========  ===========  ===========  ===========
Slot A :B  (   FE1:FE1   )   -----------  -----------  -----------  -----------
Slot C :D  (      :FOM   )   -----------  -----------  -----------  -----------
Slot 1 :2  (QuadE1:      )   -----------  -----------  -----------  -----------
Slot 3 :4  (      :      )   -----------  -----------  -----------  -----------
Slot 5 :6  (      :      )   -----------  -----------  -----------  -----------
Slot 7 :8  (      :      )   -----------  -----------  -----------  -----------
Slot 9 :10 (QuadE1:QuadE1)   CIRCUIT      LINE-NONREV  1+1 NONREV   DISABLE
Slot 11:12 (      :      )   -----------  -----------  -----------  -----------

Protection Working Port         Port 1       Port 2       Port 3       Port 4
Slot A :B  (   FE1:FE1   )
Slot C :D  (      :FOM   )
Slot 1 :2  (QuadE1:      )
Slot 3 :4  (      :      )
Slot 5 :6  (      :      )
Slot 7 :8  (      :      )
Slot 9 :10 (QuadE1:QuadE1)   9 -1         9 -2         9 -3
Slot 11:12 (      :      )
If protection type changed (ex: from 1:1 to 1+1), Please re-setup map!
>> Change configuration (Y/N)? (Note:to save,please use V-command)
```

Note:

```
Protection Working Port         Port 1       Port 2       Port 3       Port 4
Slot 9 :10 (QuadE1:QuadE1)   9 -1         9 -2         9 -3
```

Definition: 9-1 means Slot 9 port 1, 9-2 means Slot 9 port 2, and etc.

Force Switch Configuration

The protection Setup must be set before the status setup.

Go to Controller Menu > (S) System Setup > (Q) QDS1 1:1 Protection, select Status and press Enter.

The Status menu is to setup the ForceSwitch for each protection pair and ports.

```
LOOP AM3440-A                    === QDS1 1:1 Protection ===       15:19:15 08/02/2011



>> Select ? Setup     *Status
```

The Status menu, it is to setup the force switch function to the assigned port of assigned protect pair.

```
LOOP AM3440-A                    === QDS1 1:1 Protection ===       17:00:00 08/02/2011
ARROW KEYS: CURSOR MOVE, TAB: ROLL OPTIONS
Protect Pair(Master:Backup)     Port 1       Port 2       Port 3       Port 4
===========================  ===========  ===========  ===========  ===========
Slot A :B  (    FE1:FE1    )   -----------  -----------  -----------  -----------
Slot C :D  (       :FOM    )   -----------  -----------  -----------  -----------
Slot 1 :2  (QuadE1:        )   -----------  -----------  -----------  -----------
Slot 3 :4  (       :       )   -----------  -----------  -----------  -----------
Slot 5 :6  (       :       )   -----------  -----------  -----------  -----------
Slot 7 :8  (       :       )   -----------  -----------  -----------  -----------
Slot 9 :10 (QuadE1:QuadE1)    ForceSwitch  NO           NO           -----------
Slot 11:12 (       :       )   -----------  -----------  -----------  -----------

Protection Working Port         Port 1       Port 2       Port 3       Port 4
Slot A :B  (    FE1:FE1    )
Slot C :D  (       :FOM    )
Slot 1 :2  (QuadE1:        )
Slot 3 :4  (       :       )
Slot 5 :6  (       :       )
Slot 7 :8  (       :       )
Slot 9 :10 (QuadE1:QuadE1)    9 -1         9 -2         9 -3
Slot 11:12 (       :       )

<< ESC key ignore and return, ENTER key accept change >>
```

Function	Option	Default
ForceSwitch	NO, ForceSwitch	NO

Press Enter to accept change and key-in “Y” to change the configuration.

```
>> Change configuration (Y/N)? (Note:to save,please use V-command)
```

9.3 Setting up Line Protection

Line protection is illustrated in Figure below. It does not require the use of a Loop-VV Y-BOX.

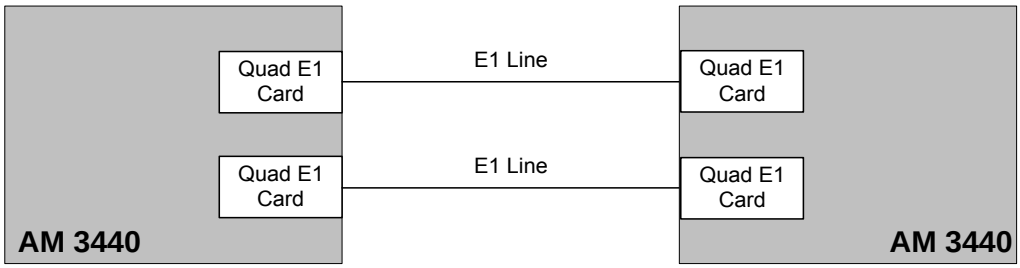

Figure 9-3 Line Protection for Quad E1 Card

9.3.1 Step by Step Quad E1 Card Line Protection Setup

The sample screens below provide step by step instructions for setting up Quad E1 Line Protection. In our sample setup we installed Quad E1 cards in slot #9 and slot #10. The card in slot #9 will be working slot, and slot 10 will be standing by.
Go to Controller Menu > (S) System Setup > (Q) QDS1 1:1 Protection, select Setup and press Enter.
The Setup menu is to setup the protection modes for each protection pair and ports.

```
LOOP AM3440-A                    === QDS1 1:1 Protection ===       17:42:06 08/02/2011




>> Select ? *Setup      Status
```

On the Setup Screen, there are four selection for the user to setup such as disable, circuit, line-non revertive line-revertive, 1+1 non revertive, and 1+1 revertive. The sample below is to setup the port 2 of slot 9: 10 as **LINE-NONREV** protection and to setup the port 3 of slot 9: 10 as **1+1-NONREV** protection. It means Slot 9 port 2 is protection working port and slot 10 port 2 as backup in LINE-Non Revertive mode and Slot 9 port 3 is protection working port and slot 10 port 3 as backup in 1+1 Non Revertive mode.

```
LOOP AM3440-A                    === QDS1 1:1 Protection ===       16:57:54 08/02/2011
ARROW KEYS: CURSOR MOVE, TAB: ROLL OPTIONS
Protect Pair(Master:Backup)     Port 1       Port 2       Port 3       Port 4
==========================  ===========  ===========  ===========  ===========
Slot A :B  (   FE1:FE1   )   -----------  -----------  -----------  -----------
Slot C :D  (       :FOM   )   -----------  -----------  -----------  -----------
Slot 1 :2  (QuadE1:       )   -----------  -----------  -----------  -----------
Slot 3 :4  (       :       )   -----------  -----------  -----------  -----------
Slot 5 :6  (       :       )   -----------  -----------  -----------  -----------
Slot 7 :8  (       :       )   -----------  -----------  -----------  -----------
Slot 9 :10 (QuadE1:QuadE1)   CIRCUIT      LINE-NONREV  1+1 NONREV   DISABLE
Slot 11:12 (       :       )   -----------  -----------  -----------  -----------

Protection Working Port         Port 1       Port 2       Port 3       Port 4
Slot A :B  (   FE1:FE1   )
Slot C :D  (       :FOM   )
Slot 1 :2  (QuadE1:       )
Slot 3 :4  (       :       )
Slot 5 :6  (       :       )
Slot 7 :8  (       :       )
Slot 9 :10 (QuadE1:QuadE1)   9 -1         9 -2         9 -3
Slot 11:12 (       :       )

If protection type changed (ex: from 1:1 to 1+1), Please re-setup map!
>> Change configuration (Y/N)? (Note:to save,please use V-command)
```

Force Switch Configuration

The protection Setup must be set before the status setup.

Go to Controller Menu > (S) System Setup > (Q) QDS1 1:1 Protection, select Status and press Enter.

The Status menu is to setup the ForceSwitch for each protection pair and ports.

```
LOOP AM3440-A                    === QDS1 1:1 Protection ===       15:19:15 08/02/2011




>> Select ? Setup     *Status
```

The Status menu, it is to setup the force switch function to the assigned port of assigned protect pair.

```
LOOP AM3440-A                 === QDS1 1:1 Protection ===       17:00:00 08/02/2011
ARROW KEYS: CURSOR MOVE, TAB: ROLL OPTIONS
Protect Pair(Master:Backup)    Port 1       Port 2       Port 3       Port 4
==========================  ===========  ===========  ===========  ===========
Slot A :B  (   FE1:FE1   )   -----------  -----------  -----------  -----------
Slot C :D  (      :FOM   )   -----------  -----------  -----------  -----------
Slot 1 :2  (QuadE1:      )   -----------  -----------  -----------  -----------
Slot 3 :4  (      :      )   -----------  -----------  -----------  -----------
Slot 5 :6  (      :      )   -----------  -----------  -----------  -----------
Slot 7 :8  (      :      )   -----------  -----------  -----------  -----------
Slot 9 :10 (QuadE1:QuadE1)   ForceSwitch  NO           NO           -----------
Slot 11:12 (      :      )   -----------  -----------  -----------  -----------

Protection Working Port        Port 1       Port 2       Port 3       Port 4
Slot A :B  (   FE1:FE1   )
Slot C :D  (      :FOM   )
Slot 1 :2  (QuadE1:      )
Slot 3 :4  (      :      )
Slot 5 :6  (      :      )
Slot 7 :8  (      :      )
Slot 9 :10 (QuadE1:QuadE1)   9 -1         9 -2         9 -3
Slot 11:12 (      :      )

<< ESC key ignore and return, ENTER key accept change >>
```

Function	Option	Default
ForceSwitch	NO, ForceSwitch	NO

10 Appendix D: Loop AM-3440-A Alarm Trap Information

10.1 Trap definition

```
-- trap MIB

    localTrap  TRAP-TYPE
       ENTERPRISE loop-AM3440-A
       VARIABLES  { ccAlarmQueueString,
                    ccAlarmType,
                    ccAlarmModel,
                    ccAlarmSlot,
                    ccAlarmPort,
                    ccAlarmSeverity }
       DESCRIPTION
       "Local alarm trap"
       ::= 3

    removeTrap  TRAP-TYPE
       ENTERPRISE loop-AM3440-A
       VARIABLES  { ccAlarmQueueString,
                    ccAlarmType,
                    ccAlarmModel,
                    ccAlarmSlot,
                    ccAlarmPort,
                    ccAlarmSeverity }
       DESCRIPTION
       "Local alarm trap remove"
       ::= 9
```

10.2 ccAlarmModel: Plug-in card model type

Number	Plug-in card Type	Plug-in card Type Description
0	fe1	1-channel E1
1	ft1	1-channel T1
2	rs232-8	8-channel RS232 with X.50 subrate
3	oct-rt-b	8-LAN-port/ 64-WAN-port Router-B
4	v35	6-channel V.35
5	x50	5-channel RS232 with X.50 subrate
6	dtu-6	6-channel U
7	dtu-10	10-channel U
8	mdsl	3-channel MDSL
9	ls-optical	1-channel and 4-channel low speed optical (C37.94)
10	em	8-channel 2W/4W E&M
11	fxs	12-channel and 24-channel FXS
12	router	32 WAN port Router
13	fxo	12-channel and 24-channel FXO
14	afr-e1	1-channel E1 ATM/Frame Relay
15	afr-t1	1-channel T1 ATM/Frame Relay
16	magneto	12-channel Magneto
17	ocudp	8-channel OCU-DP
18	quad-e1	4-channel E1
19	quad-t1	4-channel T1
21	mdsl-a	3-channel MDSL-A
22	v35-a	6-channel V.35-A
23	gshdsl-4	4-channel G.SHDSL (1 pair) w/o line power
24	gshdsl-2	2-channel G.SHDSL (2 pairs) w/o line power
25	g703	8-channel G.703 card at 64 Kbps data rate
26	mquad-e1	Mini Quad E1
28	dry-contact	8-channel Dry Contact I/O
29	fom	Fiber optical interface
30	router-a	64 WAN port Router-A
32	controller	Controller
37	conference	Conference card
39	tri-e1	3-channel E1
40	tri-t1	3-channel T1 (future option)
43	tdmoe	TDMoE
44	8DBRA	8-channel Data Bridge Card
50	sdte	Single port DTE for 4200
91	x21-a	6-channel X.21-A
92	v36-a	6-channel V.36-A
93	rs422-a	6-channel RS422-A
94	eia530-rs449-a	6-channel EIA530-A/RS449-A
99	unknown	Unknown plug-in card type

10.3 ccAlarmSlot: Slot index

Number	Slot Number
1	Slot A
2	Slot B
3	Slot C
4	Slot D
5	Slot 1
6	Slot 2
7	Slot 3
8	Slot 4
9	Slot 5
10	Slot 6
11	Slot 7
12	Slot 8
13	Slot 9
14	Slot 10
15	Slot 11
16	Slot 12

10.4 ccAlarmPort: Port index

Number	Port Number
0	Port 1
1	Port 2
2	Port 3
3	Port 4
4	Port 5
5	Port 6
6	Port 7
7	Port 8
8	Port 9
9	Port 10
10	Port 11
11	Port 12

10.5 ccAlarmType < 20: Controller alarm

Number	Alarm type
0	alarm-cut-off
1	slot-no-work
2	slot-start
3	slot-clock-loss
4	primary-start
5	redundant-loss
6	backup-switch
7	power-fail
8	redundant-chksum-error
9	fan-fail
10	map-switch
11	link-protection
12	redundant-insert
13	redundant-unsync
14	redundant-to-primary
15	plug-in card-type-mismatch
16	link-id-mismatch
17	power-consumption-alarm

Number	Alarm type
18	ssm clock switch
19	management alarm
103	master-clock-loss
104	second-clock-loss
105	redundant-ext-clock-loss
106	qe1t1-1for1-switch
111	ds0-sncp-switch
121	sntp-alarm

10.6 ccAlarmType: Unit alarm

ccAlarmType for unit alarm has two formats: Vendor Spec and Assigned. Vendor Spec is the original format that displays only the alarm number. Assigned is the new format that displays the alarm type description. Select the format in V1: Trap Setup (Command Path: Main Menu> (S) System Setup >(S)SNMP Setup >(B)V1: Trap Setup). The alarm type on the SNMP screen will show in the format that you choose.

Note: E&M, FXO, FXS and TS card do not have alarms, so there is no alarm type to these cards. For RS232 and EIA530, please refer to DTE-A alarm type table.

1. E1 Card

Vendor Spec	Assigned	Alarm type
21	e1-rai(201)	RAI
22	e1-ais(202)	AIS
23	e1-los(203)	LOS
24	e1-lof(204)	LOF
25	e1-bpv(205)	BPV
26	e1-es (206)	ES
27	e1-uas(207)	UAS
28	e1-css(208)	CSS

2. T1 Card

Vendor Spec	Assigned	Alarm type
21	t1-yel(221)	YEL
22	t1-ais(222)	AIS
23	t1-los(223)	LOS
24	t1-lof(224)	LOF
25	t1-bpv(225)	BPV
26	t1-es (226)	ES
27	t1-uas(227)	UAS
28	t1-css(228)	CSS

3. DTE-A (V.35/X.21/V.36/..) / 5RS232 (5X50) Card

Vendor Spec	Assigned	Alarm type
20	dte-unsync(501)	UNSYNC

4. 8RS232 (8X50) Card

Vendor Spec	Assigned	Alarm type
20	dte-ext-clk-loss(511)	EXT-CLK-LOSS
21	dte-rts-loss(512)	RTS-LOSS
22	dte-remote-alarm(513)	REMOTE-ALARM

5. DTU 6/10 Card

Vendor Spec	Assigned	Alarm type
20	dtu-unsync(503)	UNSYNC

6. MDSL Card

Vendor Spec	Assigned	Alarm type

20	mdsl-master-los(361)	LOS,MASTER-LOOP
21	mdsl-slave-los(362)	LOS,SLAVE-LOOP
22	mdsl-master-es-15m(363)	ES15M,MASTER-LOOP
23	mdsl-slave-es-15m(364)	ES15M,SLAVE-LOOP
24	mdsl-master-ses-15m(365)	SES15M,MASTER-LOOP
25	mdsl-slave-ses-15m(366)	SES15M,SLAVE-LOOP
26	mdsl-master-es-24h(367)	ES24H,MASTER-LOOP
27	mdsl-slave-es-24h(368)	ES24H,SLAVE-LOOP
28	mdsl-master-ses-24h(369)	SES24H,MASTER-LOOP
29	mdsl-slave-ses-24h(370)	SES24H,SLAVE-LOOP
30	mdsl-mclk-loss(371)	MCLK LOSS
31	mdsl-sealing-current(372)	SEALING CURRENT

7. ATM E1/T1 Card

Vendor Spec	Assigned	Alarm type
21	e1-rai(201) t1-yel(221)	RAI" or “YEL
22	e1-ais(202) t1-ais(222)	AIS
23	e1-los(203) t1-los(223)	LOS
24	e1-lof(204) t1-lof(224)	LOF
25	e1-bpv(205) t1-bpv(225)	BPV
26	e1-es (206) t1-es (226)	ES
27	e1-uas(207) t1-uas(227)	UAS
28	e1-css(208) t1-css(228)	CSS
29	atm-los(261)	ATM LOS
30	atm-ais(262)	ATM AIS
31	atm-rdi(263)	ATM RDI
32	atm-loc(264)	ATM LOC
33	fr-lkd (265)	FR LKD

8. QE1/Mini QE1/3E1 Card

Vendor Spec	Assigned	Alarm type
20	e1-rai(201)	RAI
21	e1-ais(202)	AIS
22	e1-los(203)	LOS
23	e1-lof(204)	LOF
24	e1-bpv(205)	BPV
25	e1-es (206)	ES
26	e1-uas(207)	UAS
27	e1-css(208)	CSS
28	ais-ins(209)	AIS-INSERT

9. QT1 Card

Vendor Spec	Assigned	Alarm type
20	t1-yel(221)	YEL
21	t1-ais(222)	AIS
22	t1-los(223)	LOS
23	t1-lof(224)	LOF
24	t1-bpv(225)	BPV

25	t1-es (226)	ES
26	t1-uas(227)	UAS
27	t1-css(228)	CSS

10. G.703 Card

Vendor Spec	Assigned	Alarm type
20	g703-los(541)	LOS

11. G.shdsl Card

Vendor Spec	Assigned	Alarm type
20	gshdsl-htuc-los-loop1(301)	LOS,MASTER-LOOP1
21	gshdsl-htuc-los-loop2(302)	LOS,MASTER-LOOP2
22	gshdsl-htur-los-loop1(303)	LOS,SLAVE-LOOP1
23	gshdsl-htur-los-loop2(304)	LOS,SLAVE-LOOP2
24	gshdsl-htuc-e1t1-los-lof(305)	LOS/LOF,MASTER-E1
25	gshdsl-htur-e1t1-los-lof(306)	LOS/LOF,SLAVE-E1
26	gshdsl-htuc-es-15m-loop1(307)	ES15M,MASTER-LOOP1
27	gshdsl-htuc-es-15m-loop2(308)	ES15M,MASTER-LOOP2
28	gshdsl-htur-es-15m-loop1(309)	ES15M,SLAVE-LOOP1
29	gshdsl-htur-es-15m-loop2(310)	ES15M,SLAVE-LOOP2
30	gshdsl-htuc-e1t1-es-15m(311)	ES15M,MASTER-E1
31	gshdsl-htur-e1t1-es-15m(312)	ES15M,SLAVE-E1
32	gshdsl-htuc-ses-15m-loop1(313)	SES15M,MASTER-LOOP1
33	gshdsl-htuc-ses-15m-loop2(314)	SES15M,MASTER-LOOP2
34	gshdsl-htur-ses-15m-loop1(315)	SES15M,SLAVE-LOOP1
35	gshdsl-htur-ses-15m-loop2(316)	SES15M,SLAVE-LOOP2
36	gshdsl-htuc-e1t1-ses-15m(317)	SES15M,MASTER-E1
37	gshdsl-htur-e1t1-ses-15m(318)	SES15M,SLAVE-E1
38	gshdsl-htuc-es-24h-loop1(319)	ES24H,MASTER-LOOP1
39	gshdsl-htuc-es-24h-loop2(320)	ES24H,MASTER-LOOP2
40	gshdsl-htur-es-24h-loop1(321)	ES24H,SLAVE-LOOP1
41	gshdsl-htur-es-24h-loop2(322)	ES24H,SLAVE-LOOP2
42	gshdsl-htuc-e1t1-es-24h(323)	ES24H,MASTER-E1
43	gshdsl-htur-e1t1-es-24h(324)	ES24H,SLAVE-E1
44	gshdsl-htuc-ses-24h-loop1(325)	SES24H,MASTER-LOOP1
45	gshdsl-htuc-ses-24h-loop2(326)	SES24H,MASTER-LOOP2
46	gshdsl-htur-ses-24h-loop1(327)	SES24H,SLAVE-LOOP1
47	gshdsl-htur-ses-24h-loop2(328)	SES24H,SLAVE-LOOP2
48	gshdsl-htuc-e1t1-ses-24h(329)	SES24H,MASTER-E1
49	gshdsl-htur-e1t1-ses-24h(330)	SES24H,SLAVE-E1
50	gshdsl-sealing-current(331)	SEALING CURRENT
51	gshdsl-mclk-loss(332)	MCLK LOSS
52	gshdsl-htuc-dte-rts(333)	RTS,MASTER-DTE
53	gshdsl-htur-dte-rts(334)	RTS,SLAVE-DTE
54	gshdsl-htuc-dte-extclk(335)	EXTCLK,MASTER-DTE
55	gshdsl-htur-dte-extclk(336)	EXTCLK,SLAVE-DTE
56	gshdsl-dying-gasp-alarm(337)	DYING GASP ALARM
57	gshdsl-loop-attenu-alarm(338)	LOOP ATTENU ALARM
58	gshdsl-low-noise-margin(339)	LOW NOISE MARGIN
59	gshdsl-htur-link-down(340)	HTUR LINK DOWN

12. FOM Card/1FOM-A Card

Vendor Spec	Assigned	Alarm type
20	fom-opt-local-lof (601)	LOF,LOCAL-OPTICAL
21	fom-opt-local-los (602)	LOS,LOCAL-OPTICAL
22	fom-opt-local-rai (603)	RAI,LOCAL-OPTICAL
23	fom-opt-remote-lof(604)	LOF,REMOTE-OPTICAL
24	fom-opt-remote-los(605)	LOS,REMOTE-OPTICAL

25	fom-opt-local-es (606)	ES, LOCAL-OPTICAL
26	fom-opt-local-ses (607)	SES, LOCAL-OPTICAL
27	fom-opt-local-uas (608)	UAS, LOCAL-OPTICAL
36	fom-e1-local-lof (617)	LOF, LOCAL-E1
37	fom-e1-remote-lof (618)	LOF, REMOTE-E1
38	fom-e1-local-es (619)	ES, LOCAL-E1
39	fom-e1-local-ses (620)	SES, LOCAL-E1
40	fom-e1-local-uas (621)	UAS, LOCAL-E1
41	fom-e1-local-bpv (622)	BPV, LOCAL-E1

13. C37.94 Card

Vendor Spec	Assigned	Alarm type
20	lso-los(441)	LOS
21	lso-yel(442)	YEL
22	lso-es (443)	ES
23	lso-ses(444)	SES
24	lso-uas(445)	UAS

14. Dry Contact/ Dry Contact-B

Vendor Spec	Assigned	Alarm type
20	dc-n1-p1(701)	Input port 1, pair 1
21	dc-n1-p2(702	Input port 1, pair 2
22	dc-n1-p3(703)	Input port 1, pair 3
23	dc-n1-p4(704)	Input port 1, pair 4
24	dc-n2-p1(705)	Input port 2, pair 1
25	dc-n2-p2(706)	Input port 2, pair 2
26	dc-n2-p3(707)	Input port 2, pair 3
27	dc-n2-p4(708)	Input port 2, pair 4

15. OCU DP Card

Vendor Spec	Assigned	Alarm type
20	ocudp-los(461)	LOS
21	ocudp-oos(462)	OOS
24	ocudp-es (465)	ES
25	ocudp-ses(466)	SES
26	ocudp-uas(467)	UAS
27	ocudp-loopbk(468)	LOOPBK
28	ocudp-test(469)	TEST
29	ocudp-lof(470)	LOF

16. RT Card

Vendor Spec	Assigned	Alarm type
20	lan1-link-down(401)	LAN1
21	lan2-link-down(402)	LAN2

17. RT-A Card

Vendor Spec	Assigned	Alarm type
20	lan1-link-down(401)	LAN1-LINK DOWN
21	lan2-link-down(402)	LAN2-LINK DOWN

18. RT-B Card

Vendor Spec	Assigned	Alarm type
20	lan1-link-down(401)	LAN1-LINK DOWN
21	lan2-link-down(402)	LAN2-LINK DOWN
22	lan3-link-down(403)	LAN3-LINK DOWN
23	lan4-link-down(404)	LAN4-LINK DOWN
24	lan5-link-down(405)	LAN5-LINK DOWN
25	lan6-link-down(406)	LAN6-LINK DOWN
26	lan7-link-down(407)	LAN7-LINK DOWN

27	lan8-link-down(408)	LAN8-LINK DOWN

19. TDMoE Card

Vendor Spec	Assigned	Alarm type
20	tdmoe-arp-lost(1001)	ARP_LOST
21	tdmoe-rx-lost(1002)	RX_LOST
22	tdmoe-cell-lost(1003)	CELL_LOST
23	tdmoe-jit-buf-underrun(1004)	UNDERRUN
24	tdmoe-jit-buf-overrun(1005)	OVERRUN
25	tdmoe-eth1-link-down(1006)	ETH1_LINK_DOWN
26	tdmoe-eth2-link-down(1007)	ETH2_LINK_DOWN
27	tdmoe-eth3-link-down(1008)	ETH3_LINK_DOWN
28	tdmoe-eth4-link-down(1009)	ETH4_LINK_DOWN

10.7 *Alarm Setup Indication*

Access (M)System Alarm Setup from the VT100 main menu to activate the alarm actions listed

Alarm Setup	Alarm Action for (type/slot/port)	Type	Slot	Port	Note
Alarm Cut Off	Alarm cut off	0	0	254	No relay
Slot Inactive	Slot N inactive	1	N	254	A1
Slot Start-up	Slot N startup	2	N	254	C1
Clock Loss	Slot N (P M) clock loss*	3	N	M	
	External clock loss *		99	254	
	Master Clock (Slot N Pm) Loss**	103	N	M	A4/C4
	Second Clock (Slot N Pm) Loss**	104	N	M	
	CTRL1/2 EXT clock loss**	105	R	254	
	CTRL1/2 redundant EXT clock loss***	105	R	254	
	SSM switch to Slot N (P M)	18	N	M	
	SSM switch to Internal		0	254	
Link Switch	Link switch to	6	N	254	Backup
	Link switch to*	6		M	QE1 1:1
	Link switch to**	106		M	QE1 1:1
	Protection on	11		M	PDH SPRing
	DS0-SNCP switch to*	11		0iiijjjj(b)	i=port, j=ts
	DS0-SNCP switch to**	111		0iiijjjj(b)	i=port, j=ts
Map Switch	Map switch to	10	0	M	m=1-4
Power Alarm	Power fail alarm	7	0	254	A3/C3
	Fan fail alarm	9			
	Power consumption	17			
Type Mismatch	Card type mismatch	15	N	254	
	Link ID mismatch	16		M	
Dual-CPU Alarm	Primary start	4	0	254	
	Redundant loss	5			A2
	Redundant checksum error	8			
	Redundant insert	12			C2
	Redundant unsync	13			
	Redundant to primary	14			
Management Alarm**	Log-in/out	19	0	P	No relay
	SNTP server X fail/ok***	121		X	

below.

***** for alarm action: ENABLE

****** for alarm action: EN_NEW

******* only for firmware version V8.06.01 and up

Model = 32 (controller) for all CTRL alarm. (Plase refer to 10.2 Alarm Model for model type)

Slot: N=A~D, 1~12, 0(none), 99=external. R=103(ctrl1-external), 104(ctrl2-external).

Port: M=1~12, 254(none)

Note: An/Cn: Cn will clear alarm relay for An

11 Appendix E: Setting up an AM3440-A PDH Shared Protection Ring

11.1 Overview

A PDH Shared Protection Ring can be an ideal solution for voice and data transmission networks, in that, if any one E1 connection is broken, the voice and data communication system will still function. This protection is made possible by mapping a loopback to where the channel came from.

In a PDH Shared Protection Ring, each line is split in two directions. The working line (outside line in the diagram below) travels in a counter-clockwise direction. The protection line (inside line) travels in a clockwise direction.

While the is no theoretical limit to the number of nodes in a ring, each node needs 2-3 seconds to stabilize SSM clock switching after a break occurs. In our sample diagram below we have used five nodes.

Note: ULSR ring does not suport E1 unframe mode. Users must use E1 frame mode to set up a ULSR ring.

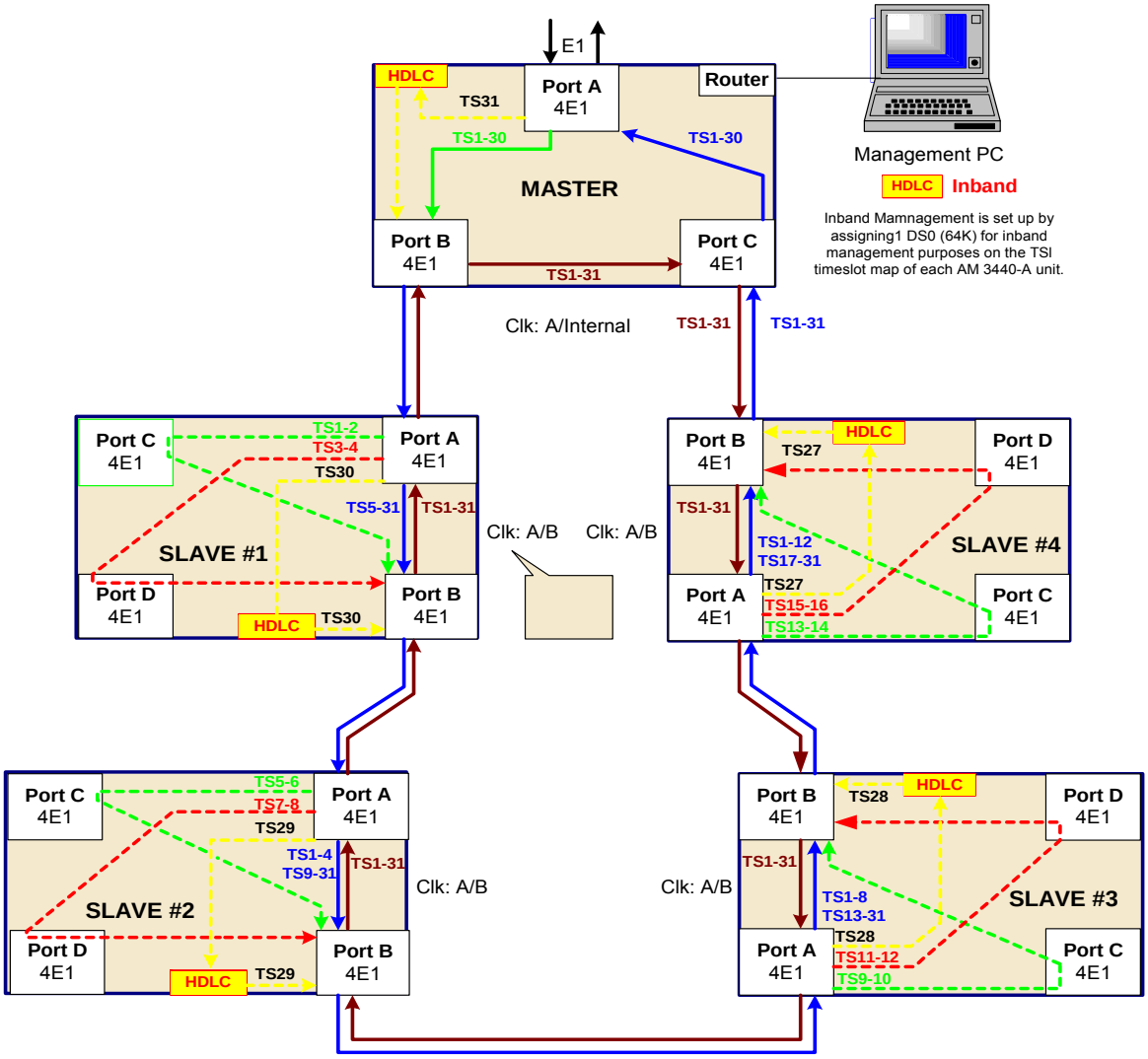

11.2 Setup Instructions

1. **Nodes**
   Set up four nodes, each of which consists of a Loop-AM3440-A device equipped with four Quad E1 cards (or alternatively, four Mini-quad E1 cards or four E1 Fiber Optical Module). Each of these nodes will be referred to as Slaves.
2. **Master Unit**
   Set up a Master unit, which consists of a Loop-AM3440-A device equipped with three Quad E1 cards (or alternatively, three Mini-quad E1 cards or three E1 FOM (Fiber Optical Module) cards, and a single Router card.
3. **VT-100**
   Each AM3440-A can be set up individually using a VT-100 monitor.
4. **Clocks**
   The clocks must be set up on each of the AM3440 units. If you have no SSM source at the MASTER unit, set the clock for this unit at NORMAL. SLAVE units must have their clock set at SSM.

```
LOOP AM3440-A      === System Setup (CLOCK-Normal Mode) ===15:16:51 03/24/2006
ARROW KEYS: CURSOR MOVE, TAB: ROLL OPTIONS


Master_Clk Source : INTERNAL
Second_Clk Source : INTERNAL
Current Clock     : MASTER_CLK
Clk_Recover_Mode  : MANUAL
Clock Status      : NORMAL
Ext. Clock Type   : E1





<< Press ESC key to return to previous menu >>
```

The clocks on the SLAVE units will be set up as shown in the screen below.

```
 LOOP AM3440-A       === System Setup (CLOCK-SSM Mode) ===  15:19:39 03/24/2006
ARROW KEYS: CURSOR MOVE, TAB: ROLL OPTIONS


First   Clock Source : SLOT_1 P1
Second  Clock Source : SLOT_1 P2
Third   Clock Source : NONE
Current Clock        : FIRST_CLK
Clock   Status       : NORMAL





<< Press ESC key to return to previous menu >>
```

5. FDL (Facilities Data Link)

On the Port System Setup screen, set the FDL must be set at **SSM** for all ports in the ring (ie. Slave unit ports and Master unit ports). This setting is highlighted on the sample setup screen below.

```
SLOT A MQuad-E1 PORT 1    === Port System Setup ===        15:24:25 03/24/2006
ARROW KEYS: CURSOR MOVE, TAB: ROLL OPTIONS

     FRAME     = ON
     CODE      = HDB3
     CRC       = ON
     RAI       = ON
     AIS       = FRAMED
     CAS       = OFF
     SIGNALLING= TRANS
     CGA       = NORM
     OOS       = BUSY
     FDL       = SSM
     Sa_bit    = Sa4
     IDLE      = D5
     Protected = DISABLE
     Master    = SLAVE
     INTF      = 120 Ohm


Warning!! If you need to change FRAME and CAS.
          Please clear TSI MAP(MAP1~4) of this port.
<< Press ESC key to return to previous menu >>
```

6. TSI Function

The TSI function for all the AM3440-A devices must be set at **1: N (Multicast)**. This setting is highlighted on the sample setup screen below.

```
LOOP AM3440-A           === System Setup (SYSTEM) ===      09:39:08 08/18/2010
ARROW KEYS: CURSOR MOVE, TAB: ROLL OPTIONS
[System]
Time/Date    : 09:39:08 08/18/2010
Device Name  : LOOP AM3440-A

[Network]
NI   EN  IPAddress       SubnetMask      Frame      LB Timer
LAN :ON  010.003.023.010 255.255.000.000 Ethernet
WAN :ON  020.001.001.002 255.255.000.000 HDLC       00000001
Gateway Interface: LAN   Gateway IPAddr: 000.000.000.000
Inband Uses Slot: D (or 12)     Note: Slot D (or 12) port 4 can't use unframe mode!

[CONSOLE port]
Baud Rate    : 38400
Data Length  : 8-Bits
Stop Bit     : 1-Bit
Parity       : NONE
XON_XOFF     : XOFF

[TSI map]                              [Clock]
TSI Function   : 1:N(Multicast)        Clock Mode   : Normal
Idle Signalling: 1010

<< Press ESC key to return to previous menu >>
```

7. Map Setup

You must do your mapping for the Master Unit. This is a sample TSI map for the Master unit. The source port is Slot1, Port 3 and the target port is Slot1, port 1.

```
LOOP AM3440-A             === System Setup (MAP) ===       15:20:40 03/24/2006
ARROW KEYS: CURSOR MOVE, TAB: ROLL OPTIONS
MAP NO: MAP_1
            Target     Quad-E1 NON-CAS         Source     Quad-E1 NON-CAS
Target      PO/TS D SL/PO TS PO/TS D SL/PO TS  PO/TS D SL/PO TS PO/TS D SL/PO TS
Slot  :  1  ===== ========== ===== ==========  ===== ========== ===== ==========
Port  : P1   1  1 d  1  3  1  1 17 d  1  3 17   3  1 d  1  2  1  3 17 d  1  2 17
T.S.  : 01   1  2 d  1  3  2  1 18 d  1  3 18   3  2 d  1  2  2  3 18 d  1  2 18
             1  3 d  1  3  3  1 19 d  1  3 19   3  3 d  1  2  3  3 19 d  1  2 19
             1  4 d  1  3  4  1 20 d  1  3 20   3  4 d  1  2  4  3 20 d  1  2 20
T.S.# : 31   1  5 d  1  3  5  1 21 d  1  3 21   3  5 d  1  2  5  3 21 d  1  2 21
Clear : No   1  6 d  1  3  6  1 22 d  1  3 22   3  6 d  1  2  6  3 22 d  1  2 22
d/v   : d    1  7 d  1  3  7  1 23 d  1  3 23   3  7 d  1  2  7  3 23 d  1  2 23
             1  8 d  1  3  8  1 24 d  1  3 24   3  8 d  1  2  8  3 24 d  1  2 24
             1  9 d  1  3  9  1 25 d  1  3 25   3  9 d  1  2  9  3 25 d  1  2 25
Source       1 10 d  1  3 10  1 26 d  1  3 26   3 10 d  1  2 10  3 26 d  1  2 26
Slot  :  1   1 11 d  1  3 11  1 27 d  1  3 27   3 11 d  1  2 11  3 27 d  1  2 27
Port  : P3   1 12 d  1  3 12  1 28 d  1  3 28   3 12 d  1  2 12  3 28 d  1  2 28
T.S.  : 01   1 13 d  1  3 13  1 29 d  1  3 29   3 13 d  1  2 13  3 29 d  1  2 29
             1 14 d  1  3 14  1 30 d  1  3 30   3 14 d  1  2 14  3 30 d  1  2 30
Confirm?Yes  1 15 d  1  3 15  1 31 d  1  3 31   3 15 d  1  2 15  3 31 d  1  2 31
             1 16 d  1  3 16                    3 16 d  1  2 16

<< Press ESC to return to Controller Setup menu, then Press D to active >>
```

This is a sample TSI map for the Master unit. The source port is Slot 1, Port 1 and the target port is Slot 1, Port 2.

```
LOOP AM3440-A             === System Setup (MAP) ===       15:20:40 03/24/2006
ARROW KEYS: CURSOR MOVE, TAB: ROLL OPTIONS
MAP NO: MAP_1
            Target     Quad-E1 NON-CAS         Source     Quad-E1 NON-CAS
Target      PO/TS D SL/PO TS PO/TS D SL/PO TS  PO/TS D SL/PO TS PO/TS D SL/PO TS
Slot  :  1  ===== ========== ===== ==========  ===== ========== ===== ==========
Port  : P2   2  1 d  1  1  1  2 17 d  1  1 17   1  1 d  1  3  1  1 17 d  1  3 17
T.S.  : 01   2  2 d  1  1  2  2 18 d  1  1 18   1  2 d  1  3  2  1 18 d  1  3 18
             2  3 d  1  1  3  2 19 d  1  1 19   1  3 d  1  3  3  1 19 d  1  3 19
             2  4 d  1  1  4  2 20 d  1  1 20   1  4 d  1  3  4  1 20 d  1  3 20
T.S.# : 30   2  5 d  1  1  5  2 21 d  1  1 21   1  5 d  1  3  5  1 21 d  1  3 21
Clear : No   2  6 d  1  1  6  2 22 d  1  1 22   1  6 d  1  3  6  1 22 d  1  3 22
d/v   : d    2  7 d  1  1  7  2 23 d  1  1 23   1  7 d  1  3  7  1 23 d  1  3 23
             2  8 d  1  1  8  2 24 d  1  1 24   1  8 d  1  3  8  1 24 d  1  3 24
             2  9 d  1  1  9  2 25 d  1  1 25   1  9 d  1  3  9  1 25 d  1  3 25
Source       2 10 d  1  1 10  2 26 d  1  1 26   1 10 d  1  3 10  1 26 d  1  3 26
Slot  :  1   2 11 d  1  1 11  2 27 d  1  1 27   1 11 d  1  3 11  1 27 d  1  3 27
Port  : P1   2 12 d  1  1 12  2 28 d  1  1 28   1 12 d  1  3 12  1 28 d  1  3 28
T.S.  : 01   2 13 d  1  1 13  2 29 d  1  1 29   1 13 d  1  3 13  1 29 d  1  3 29
             2 14 d  1  1 14  2 30 d  1  1 30   1 14 d  1  3 14  1 30 d  1  3 30
Confirm?Yes  2 15 d  1  1 15  2 31 d IB     1   1 15 d  1  3 15  1 31 d  1  3 31
             2 16 d  1  1 16                    1 16 d  1  3 16

<< Press ESC to return to Controller Setup menu, then Press D to active >>
```

Chapter 11 Appendix E: Setting up an AM3440-A PDH Shared Protection Ring

This is a sample TSI map for the Master unit. The source port is Slot 1, Port 2 and the target port is Slot 1, Port 3.

```
LOOP AM3440-A              === System Setup (MAP) ===       15:20:40 03/24/2006
ARROW KEYS: CURSOR MOVE, TAB: ROLL OPTIONS
MAP NO: MAP_1
            Target     Quad-E1 NON-CAS          Source     Quad-E1 NON-CAS
Target      PO/TS D SL/PO TS PO/TS D SL/PO TS  PO/TS D SL/PO TS PO/TS D SL/PO TS
Slot  :  1  ===== ========== ===== ==========  ===== ========== ===== ==========
Port  : P3   3  1 d  1  2  1  3 17 d  1  2 17   2  1 d  1  1  1  2 17 d  1  1 17
T.S.  : 01   3  2 d  1  2  2  3 18 d  1  2 18   2  2 d  1  1  2  2 18 d  1  1 18
             3  3 d  1  2  3  3 19 d  1  2 19   2  3 d  1  1  3  2 19 d  1  1 19
             3  4 d  1  2  4  3 20 d  1  2 20   2  4 d  1  1  4  2 20 d  1  1 20
T.S.# : 31   3  5 d  1  2  5  3 21 d  1  2 21   2  5 d  1  1  5  2 21 d  1  1 21
Clear : No   3  6 d  1  2  6  3 22 d  1  2 22   2  6 d  1  1  6  2 22 d  1  1 22
d/v   : d    3  7 d  1  2  7  3 23 d  1  2 23   2  7 d  1  1  7  2 23 d  1  1 23
             3  8 d  1  2  8  3 24 d  1  2 24   2  8 d  1  1  8  2 24 d  1  1 24
             3  9 d  1  2  9  3 25 d  1  2 25   2  9 d  1  1  9  2 25 d  1  1 25
Source       3 10 d  1  2 10  3 26 d  1  2 26   2 10 d  1  1 10  2 26 d  1  1 26
Slot  :  1   3 11 d  1  2 11  3 27 d  1  2 27   2 11 d  1  1 11  2 27 d  1  1 27
Port  : P2   3 12 d  1  2 12  3 28 d  1  2 28   2 12 d  1  1 12  2 28 d  1  1 28
T.S.  : 01   3 13 d  1  2 13  3 29 d  1  2 29   2 13 d  1  1 13  2 29 d  1  1 29
             3 14 d  1  2 14  3 30 d  1  2 30   2 14 d  1  1 14  2 30 d  1  1 30
Confirm?Yes  3 15 d  1  2 15  3 31 d  1  2 31   2 15 d  1  1 15  2 31 d IB     1
             3 16 d  1  2 16                    2 16 d  1  1 16

<< Press ESC to return to Controller Setup menu, then Press D to active >>
```

This is a sample TSI map for the Master unit. Note that this map sets up the HDLC Inband Management mapping.

```
LOOP AM3440-A              === System Setup (MAP) ===       15:20:40 03/24/2006
ARROW KEYS: CURSOR MOVE, TAB: ROLL OPTIONS
MAP NO: MAP_1
            Target     In-Band                  Source     Quad-E1 NON-CAS
Target      PO/TS D SL/PO TS PO/TS D SL/PO TS  PO/TS D SL/PO TS PO/TS D SL/PO TS
Slot  : IB  ===== ========== ===== ==========  ===== ========== ===== ==========
Port  :         1 d  1  1 31                    1  1 d  1  3  1  1 17 d  1  3 17
T.S.  : 01                                      1  2 d  1  3  2  1 18 d  1  3 18
                                                1  3 d  1  3  3  1 19 d  1  3 19
                                                1  4 d  1  3  4  1 20 d  1  3 20
T.S.# : 01                                      1  5 d  1  3  5  1 21 d  1  3 21
Clear : No                                      1  6 d  1  3  6  1 22 d  1  3 22
d/v   : d                                       1  7 d  1  3  7  1 23 d  1  3 23
                                                1  8 d  1  3  8  1 24 d  1  3 24
                                                1  9 d  1  3  9  1 25 d  1  3 25
Source                                          1 10 d  1  3 10  1 26 d  1  3 26
Slot  :  1                                      1 11 d  1  3 11  1 27 d  1  3 27
Port  : P1                                      1 12 d  1  3 12  1 28 d  1  3 28
T.S.  : 31                                      1 13 d  1  3 13  1 29 d  1  3 29
                                                1 14 d  1  3 14  1 30 d  1  3 30
Confirm?Yes                                     1 15 d  1  3 15  1 31 d  1  3 31
                                                1 16 d  1  3 16

<< Press ESC to return to Controller Setup menu, then Press D to active >>
```

8. Ring Enabling

From the Master Unit AM 3440-A Controller Setup screen press **R** to set up PDH Ring Protection.

```
LOOP AM3440-A          === Controller Setup ===      11:49:25 10/09/2009


                            A -> System
                            S -> SNMP Setup
                            B -> Password
                            C -> TSI Map Setup
                            D -> Select a New TSI Map
                            E -> Copy a TSI Map to Another
                            F -> Clear a TSI Map
                            L -> Command Line
                            I -> Init New Card
                            J -> Clear Empty Slot
                            G -> Link Backup Function
                            Q -> QDS1 1:1 Protection
                            K -> DS0-SNCP Setup
                            R -> PDH Ring Protection
                            T -> PDH Ring Diagnostic
                            N -> SNTP Setup
                            H -> TELNET/SSH Setup
                            P -> Power Setup


<< Press ESC key to return to Main Menu or enter a command >>
```

The PDH Ring Protection screen will appear.

```
LOOP AM3440-A            === PDH Ring Protection ===       18:10:53 02/16/2012
ARROW KEYS: Cursor move; Change options by TAB, or by typing
PDH Ring Protection: ENABLE             Ring Station    : SLAVE
Switching Interval : 05                 Alarm Filtering: 030
Slot(Model)          Port 1    Port 2    Port 3    Port 4
==============       =======   =======   =======   =======
 C  (           )    -------   -------   -------   -------
 D  (           )    -------   -------   -------   -------
 1  (Quad E1    )    ENABLE    ENABLE    DISABLE   DISABLE
 2  (           )    -------   -------   -------   -------
 3  (           )    -------   -------   -------   -------
 4  (           )    -------   -------   -------   -------
 5  (           )    -------   -------   -------   -------
 6  (           )    -------   -------   -------   -------
 7  (           )    -------   -------   -------   -------
 8  (           )    -------   -------   -------   -------
 9  (           )    -------   -------   -------   -------
 10 (           )    -------   -------   -------   -------
 11 (           )    -------   -------   -------   -------
 12 (           )    -------   -------   -------   -------

<< Press ESC key to return to previous menu >>
```

You must now repeat steps 7 and 8 for each of the AM3440-A Slave units in order to complete the PDH Shared Protection Ring setup procedure**.**

12 Appendix F: Setting up an AM3440-A PDH Shared Protection Ring (T1)

12.1 Overview

A PDH Shared Protection Ring can be an ideal solution for voice and data transmission networks, in that, if any one T1 connection is broken, the voice and data communication system will still function. This protection is made possible by mapping a loopback to where the channel came from.

In a PDH Shared Protection Ring, each line is split in two directions. The working line (outside line in the diagram below) travels in a counter-clockwise direction. The protection line (inside line) travels in a clockwise direction.

While the is no theoretical limit to the number of nodes in a ring, each node needs 2-3 seconds to stabilize SSM clock switching after a break occurs. In our sample diagram below we have used five nodes.

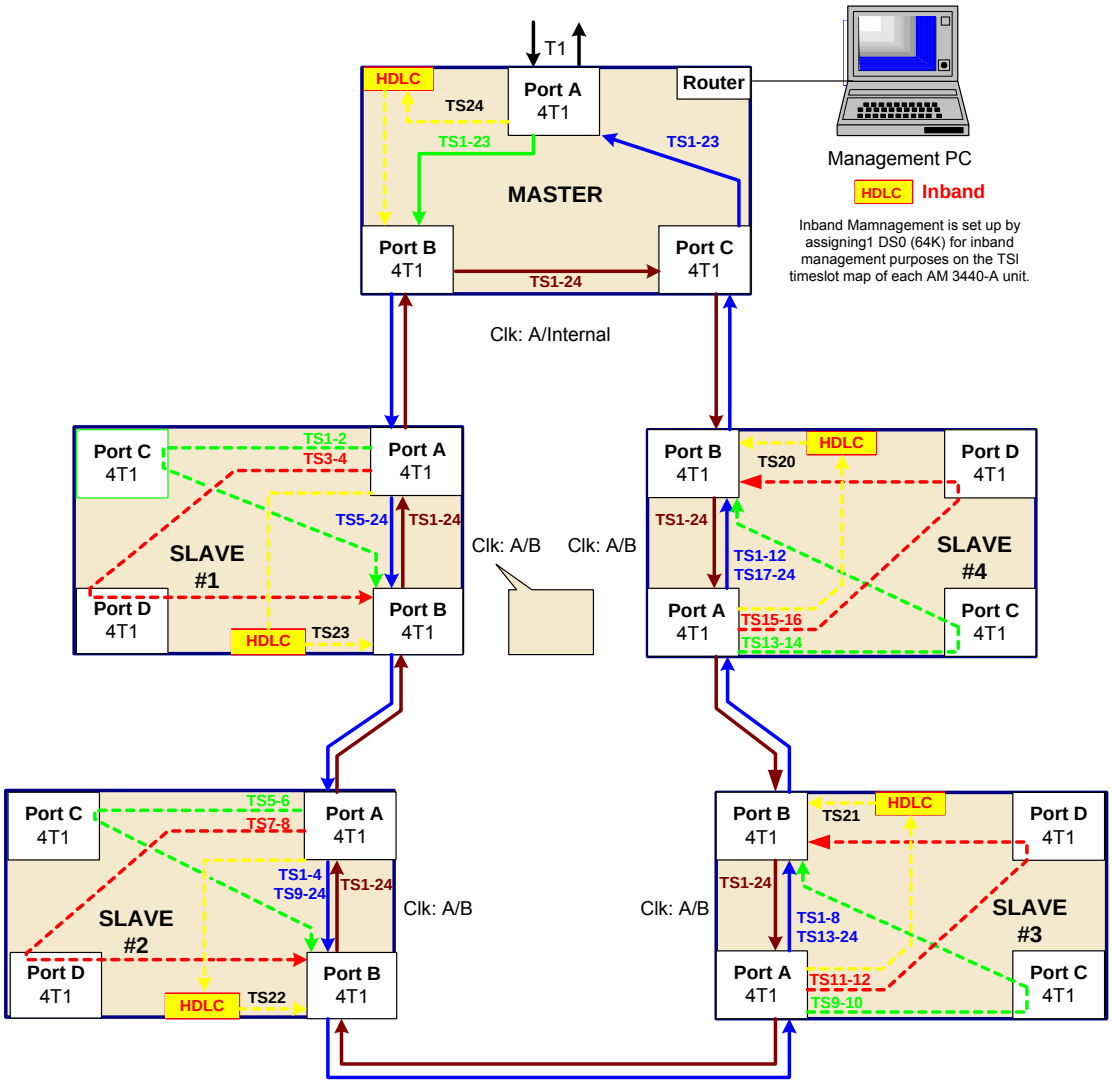

12.2 Setup Instructions

1. **Nodes**
   Set up four nodes, each of which consists of a Loop-AM3440-A device equipped with four Quad T1 cards. Each of these nodes will be referred to as Slaves.
2. **Master Unit**
   Set up a Master unit, which consists of a Loop-AM3440-A device equipped with three Quad T1 cards, and a single Router card.
3. **VT-100**
   Each AM3440-A can be set up individually using a VT-100 monitor.
4. **Clocks**
   The clocks must be set up on each of the AM 3440-A units. If you have no SSM source at the MASTER unit, set the clock for this unit at NORMAL. SLAVE units must have their clock set at SSM.

```
LOOP AM3440-A      === System Setup (CLOCK-Normal Mode) ===15:16:51 03/24/2006
ARROW KEYS: CURSOR MOVE, TAB: ROLL OPTIONS


Master_Clk Source : INTERNAL
Second_Clk Source : INTERNAL
Current Clock     : MASTER_CLK
Clk_Recover_Mode  : MANUAL
Clock Status      : NORMAL
Ext. Clock Type   : E1





<< Press ESC key to return to previous menu >>
```

The clocks on the SLAVE units will be set up as shown in the screen below.

```
 LOOP AM3440-A       === System Setup (CLOCK-SSM Mode) ===  15:19:39 03/24/2006
ARROW KEYS: CURSOR MOVE, TAB: ROLL OPTIONS


First   Clock Source : SLOT_1 P1
Second  Clock Source : SLOT_1 P2
Third   Clock Source : NONE
Current Clock        : FIRST_CLK
Clock   Status       : NORMAL





<< Press ESC key to return to previous menu >>
```

5. FDL (Facilities Data Link)

On the Port System Setup screen, set the FDL must be set at **FDL and FRAME (must be ESF & T1.403)** for all ports in the ring (ie. Slave unit ports and Master unit ports). This setting is highlighted on the sample setup screen below.

```
SLOT 5  Quad-T1 PORT 1    === Port System Setup ===        10:35:03 03/06/2007
ARROW KEYS: CURSOR MOVE, TAB: ROLL OPTIONS

     FRAME     = ESF&T1.403
     CODE      = B8ZS
     YEL       = ON
     AIS       = FRAMED
     CAS       = OFF
     SIGNALLI= TRANS
     CGA       = NORM
     OOS       = BUSY
     INBAND    = OFF
     IDLE      = FF
     INTF      = LONG HAUL
     LBO       = 0 dB
     FDL       = FDL
     Protected = DISABLE
     Master    = ****


<< Press ESC key to return to previous menu >>
```

6. TSI Function

The TSI function for all the AM3440-A devices must be set at **1: N (Multicast)**. This setting is highlighted on the sample setup screen below.

```
LOOP AM3440-A           === System Setup (SYSTEM) ===      09:39:08 08/18/2010
ARROW KEYS: CURSOR MOVE, TAB: ROLL OPTIONS
[System]
Time/Date    : 09:39:08 08/18/2010
Device Name  : LOOP AM3440-A

[Network]
NI   EN  IPAddress       SubnetMask      Frame      LB Timer
LAN :ON  010.003.023.010 255.255.000.000 Ethernet
WAN :ON  020.001.001.002 255.255.000.000 HDLC       00000001
Gateway Interface: LAN   Gateway IPAddr: 000.000.000.000
Inband Uses Slot: D (or 12)     Note: Slot D (or 12) port 4 can't use unframe mode!
[CONSOLE port]
Baud Rate    : 38400
Data Length  : 8-Bits
Stop Bit     : 1-Bit
Parity       : NONE
XON_XOFF     : XOFF

[TSI map]                               [Clock]
TSI Function   : 1:N (Multicast)        Clock Mode   : Normal
Idle Signalling: 1010

<< Press ESC key to return to previous menu >>
```

7 Map Setup

You must do your mapping for the Master Unit. This is a sample TSI map for the Master unit. The source port is Slot1, Port 3 and the target port is Slot1, port 1.

```
LOOP AM3440-A             === System Setup (MAP) ===       15:20:40 03/24/2006
ARROW KEYS: CURSOR MOVE, TAB: ROLL OPTIONS
MAP NO: MAP_1
            Target     Quad-T1 NON-CAS         Source     Quad-T1 NON-CAS
Target      PO/TS D SL/PO TS PO/TS D SL/PO TS  PO/TS D SL/PO TS PO/TS D SL/PO TS
Slot  :  1  ===== ========== ===== ==========  ===== ========== ===== ==========
Port  : P1   1  1 d  1  3  1  1 17 d  1  3 17   3  1 d  1  2  1  3 17 d  1  2 17
T.S.  : 01   1  2 d  1  3  2  1 18 d  1  3 18   3  2 d  1  2  2  3 18 d  1  2 18
             1  3 d  1  3  3  1 19 d  1  3 19   3  3 d  1  2  3  3 19 d  1  2 19
             1  4 d  1  3  4  1 20 d  1  3 20   3  4 d  1  2  4  3 20 d  1  2 20
T.S.# : 24   1  5 d  1  3  5  1 21 d  1  3 21   3  5 d  1  2  5  3 21 d  1  2 21
Clear : No   1  6 d  1  3  6  1 22 d  1  3 22   3  6 d  1  2  6  3 22 d  1  2 22
d/v   : d    1  7 d  1  3  7  1 23 d  1  3 23   3  7 d  1  2  7  3 23 d  1  2 23
             1  8 d  1  3  8  1 24 d  1  3 24   3  8 d  1  2  8  3 24 d  1  2 24
             1  9 d  1  3  9                    3  9 d  1  2  9
Source       1 10 d  1  3 10                    3 10 d  1  2 10
Slot  :  1   1 11 d  1  3 11                    3 11 d  1  2 11
Port  : P3   1 12 d  1  3 12                    3 12 d  1  2 12
T.S.  : 01   1 13 d  1  3 13                    3 13 d  1  2 13
             1 14 d  1  3 14                    3 14 d  1  2 14
Confirm?Yes  1 15 d  1  3 15                    3 15 d  1  2 15
             1 16 d  1  3 16                    3 16 d  1  2 16

<< Press ESC to return to Controller Setup menu, then Press D to active >>
```

This is a sample TSI map for the Master unit. The source port is Slot 1, Port 1 and the target port is Slot 1, Port 2.

```
LOOP AM3440-A             === System Setup (MAP) ===       15:20:40 03/24/2006
ARROW KEYS: CURSOR MOVE, TAB: ROLL OPTIONS
MAP NO: MAP_1
            Target     Quad-T1 NON-CAS         Source     Quad-T1 NON-CAS
Target      PO/TS D SL/PO TS PO/TS D SL/PO TS  PO/TS D SL/PO TS PO/TS D SL/PO TS
Slot  :  1  ===== ========== ===== ==========  ===== ========== ===== ==========
Port  : P2   2  1 d  1  1  1  2 17 d  1  1 17   1  1 d  1  3  1  1 17 d  1  3 17
T.S.  : 01   2  2 d  1  1  2  2 18 d  1  1 18   1  2 d  1  3  2  1 18 d  1  3 18
             2  3 d  1  1  3  2 19 d  1  1 19   1  3 d  1  3  3  1 19 d  1  3 19
             2  4 d  1  1  4  2 20 d  1  1 20   1  4 d  1  3  4  1 20 d  1  3 20
T.S.# : 23   2  5 d  1  1  5  2 21 d  1  1 21   1  5 d  1  3  5  1 21 d  1  3 21
Clear : No   2  6 d  1  1  6  2 22 d  1  1 22   1  6 d  1  3  6  1 22 d  1  3 22
d/v   : d    2  7 d  1  1  7  2 23 d  1  1 23   1  7 d  1  3  7  1 23 d  1  3 23
             2  8 d  1  1  8  2 24 d  IB    1   1  8 d  1  3  8  1 24 d  1  3 24
             2  9 d  1  1  9                    1  9 d  1  3  9
Source       2 10 d  1  1 10                    1 10 d  1  3 10
Slot  :  1   2 11 d  1  1 11                    1 11 d  1  3 11
Port  : P1   2 12 d  1  1 12                    1 12 d  1  3 12
T.S.  : 01   2 13 d  1  1 13                    1 13 d  1  3 13
             2 14 d  1  1 14                    1 14 d  1  3 14
Confirm?Yes  2 15 d  1  1 15                    1 15 d  1  3 15
             2 16 d  1  1 16                    1 16 d  1  3 16

<< Press ESC to return to Controller Setup menu, then Press D to active >>
```

Chapter 12 Appendix F: Setting up an AM3440-A PDH Shared Protection Ring (T1)

This is a sample TSI map for the Master unit. The source port is Slot 1, Port 2 and the target port is Slot 1, Port 3.

```
LOOP AM3440-A              === System Setup (MAP) ===       15:20:40 03/24/2006
ARROW KEYS: CURSOR MOVE, TAB: ROLL OPTIONS
MAP NO: MAP_1
            Target     Quad-T1 NON-CAS         Source     Quad-T1 NON-CAS
Target      PO/TS D SL/PO TS PO/TS D SL/PO TS  PO/TS D SL/PO TS PO/TS D SL/PO TS
Slot  :  1  ===== ========== ===== ==========  ===== ========== ===== ==========
Port  : P3   3  1 d  1  2  1  3 17 d  1  2 17   2  1 d  1  1  1  2 17 d  1  1 17
T.S.  : 01   3  2 d  1  2  2  3 18 d  1  2 18   2  2 d  1  1  2  2 18 d  1  1 18
             3  3 d  1  2  3  3 19 d  1  2 19   2  3 d  1  1  3  2 19 d  1  1 19
             3  4 d  1  2  4  3 20 d  1  2 20   2  4 d  1  1  4  2 20 d  1  1 20
T.S.# : 24   3  5 d  1  2  5  3 21 d  1  2 21   2  5 d  1  1  5  2 21 d  1  1 21
Clear : No   3  6 d  1  2  6  3 22 d  1  2 22   2  6 d  1  1  6  2 22 d  1  1 22
d/v   : d    3  7 d  1  2  7  3 23 d  1  2 23   2  7 d  1  1  7  2 23 d  1  1 23
             3  8 d  1  2  8  3 24 d  1  2 24   2  8 d  1  1  8  2 24 d IB     1
             3  9 d  1  2  9                    2  9 d  1  1  9
Source       3 10 d  1  2 10                    2 10 d  1  1 10
Slot  :  1   3 11 d  1  2 11                    2 11 d  1  1 11
Port  : P2   3 12 d  1  2 12                    2 12 d  1  1 12
T.S.  : 01   3 13 d  1  2 13                    2 13 d  1  1 13
             3 14 d  1  2 14                    2 14 d  1  1 14
Confirm?Yes  3 15 d  1  2 15                    2 15 d  1  1 15
             3 16 d  1  2 16                    2 16 d  1  1 16

<< Press ESC to return to Controller Setup menu, then Press D to active >>
```

This is a sample TSI map for the Master unit. Note that this map sets up the HDLC Inband Management mapping.

```
LOOP AM3440-A              === System Setup (MAP) ===       15:20:40 03/24/2006
ARROW KEYS: CURSOR MOVE, TAB: ROLL OPTIONS
MAP NO: MAP_1
            Target     In-Band                 Source     Quad-T1 NON-CAS
Target      PO/TS D SL/PO TS PO/TS D SL/PO TS  PO/TS D SL/PO TS PO/TS D SL/PO TS
Slot  : IB  ===== ========== ===== ==========  ===== ========== ===== ==========
Port  :         1 d  1  1 24                    1  1 d  1  3  1  1 17 d  1  3 17
T.S.  : 01                                      1  2 d  1  3  2  1 18 d  1  3 18
                                                1  3 d  1  3  3  1 19 d  1  3 19
                                                1  4 d  1  3  4  1 20 d  1  3 20
T.S.# : 01                                      1  5 d  1  3  5  1 21 d  1  3 21
Clear : No                                      1  6 d  1  3  6  1 22 d  1  3 22
d/v   : d                                       1  7 d  1  3  7  1 23 d  1  3 23
                                                1  8 d  1  3  8  1 24 d  1  3 24
                                                1  9 d  1  3  9
Source                                          1 10 d  1  3 10
Slot  :  1                                      1 11 d  1  3 11
Port  : P1                                      1 12 d  1  3 12
T.S.  : 24                                      1 13 d  1  3 13
                                                1 14 d  1  3 14
Confirm?Yes                                     1 15 d  1  3 15
                                                1 16 d  1  3 16

<< Press ESC to return to Controller Setup menu, then Press D to active >>
```

8. Ring Enabling

From the Master Unit AM 3440-A Controller Setup screen press **R** to set up PDH Ring Protection.

```
LOOP AM3440-A          === Controller Setup ===      11:49:25 10/09/2009


                            A -> System
                            S -> SNMP Setup
                            B -> Password
                            C -> TSI Map Setup
                            D -> Select a New TSI Map
                            E -> Copy a TSI Map to Another
                            F -> Clear a TSI Map
                            L -> Command Line
                            I -> Init New Card
                            J -> Clear Empty Slot
                            G -> Link Backup Function
                            Q -> QDS1 1:1 Protection
                            K -> DS0-SNCP Setup
                            R -> PDH Ring Protection
                            T -> PDH Ring Diagnostic
                            N -> SNTP Setup
                            H -> TELNET/SSH Setup
                            P -> Power Setup


<< Press ESC key to return to Main Menu or enter a command >>
```

The PDH Ring Protection screen will appear.

```
LOOP AM3440-A            === PDH Ring Protection ===       18:10:53 02/16/2012
ARROW KEYS: Cursor move; Change options by TAB, or by typing
PDH Ring Protection: ENABLE             Ring Station   : MASTER
Switching Interval : 05                 Alarm Filtering: 030
Slot(Model)          Port 1    Port 2    Port 3    Port 4
==============       =======   =======   =======   =======
 C  (           )    -------   -------   -------   -------
 D  (           )    -------   -------   -------   -------
 1  (Quad T1    )    ENABLE    ENABLE    DISABLE   DISABLE
 2  (           )    -------   -------   -------   -------
 3  (           )    -------   -------   -------   -------
 4  (           )    -------   -------   -------   -------
 5  (           )    -------   -------   -------   -------
 6  (           )    -------   -------   -------   -------
 7  (           )    -------   -------   -------   -------
 8  (           )    -------   -------   -------   -------
 9  (           )    -------   -------   -------   -------
 10 (           )    -------   -------   -------   -------
 11 (           )    -------   -------   -------   -------
 12 (           )    -------   -------   -------   -------

<< Press ESC key to return to previous menu >>
```

You must now repeat steps 7 and 8 for each of the AM3440-A Slave units in order to complete the PDH Shared Protection Ring setup procedure.

13 3E1 DS0-SNCP Setup

This chapter provides procedures for building a DS0-SNCP Ring with AM3440-CHAJ units and 3E1 cards. Please refer to 3E1 plug-in manual for detail info.

Note: Both AM3440-CHAJ and CHCJ units can be applied on 3E1 DS0-SNCP setup.

13.1 Physical Requirement

The physical configuration of a DS0-SNCP ring should consist of at least three AM3440 units, two of which serve as interconnected units and one as an intermediate unit. The units are connected by E1 lines. To ensure link diversity, the east and west E1 line is recommended to exit the same unit at the ports of different 3E1 card.

On each AM3440 unit will be a primary path and a secondary path (detailed setup procedure is described in the following section). Both primary and secondary paths are used to protect either a data or voice interface.

Below is the detailed list for applicable interface for 3E1 protection:

Data Interface	E1,T1, Mini Quad E1, E1/T1 ATM Frame Relay, Router, FOM, TS, DTE, G.shdsl, dry contact, C37.94, RS232, TDMoE
Voice Interface	E&M, FXS, FXO, Magneto, QE&M, QFXS, QFXO

Note 1: For DS0-SNCP setup, the 3E1 card is only applicable on AM3440 unit version J (CHAJ) and controller software version 8.02.01 and up.

Note 2: A maximum of ninety-three DS0-SNCP rings can be set in AM3440-A chassis (31 DS0x3).

The illustration below is a sample application of a DS0-SNCP ring, and also the physical topology that corresponds to the setup procedure in the next section.

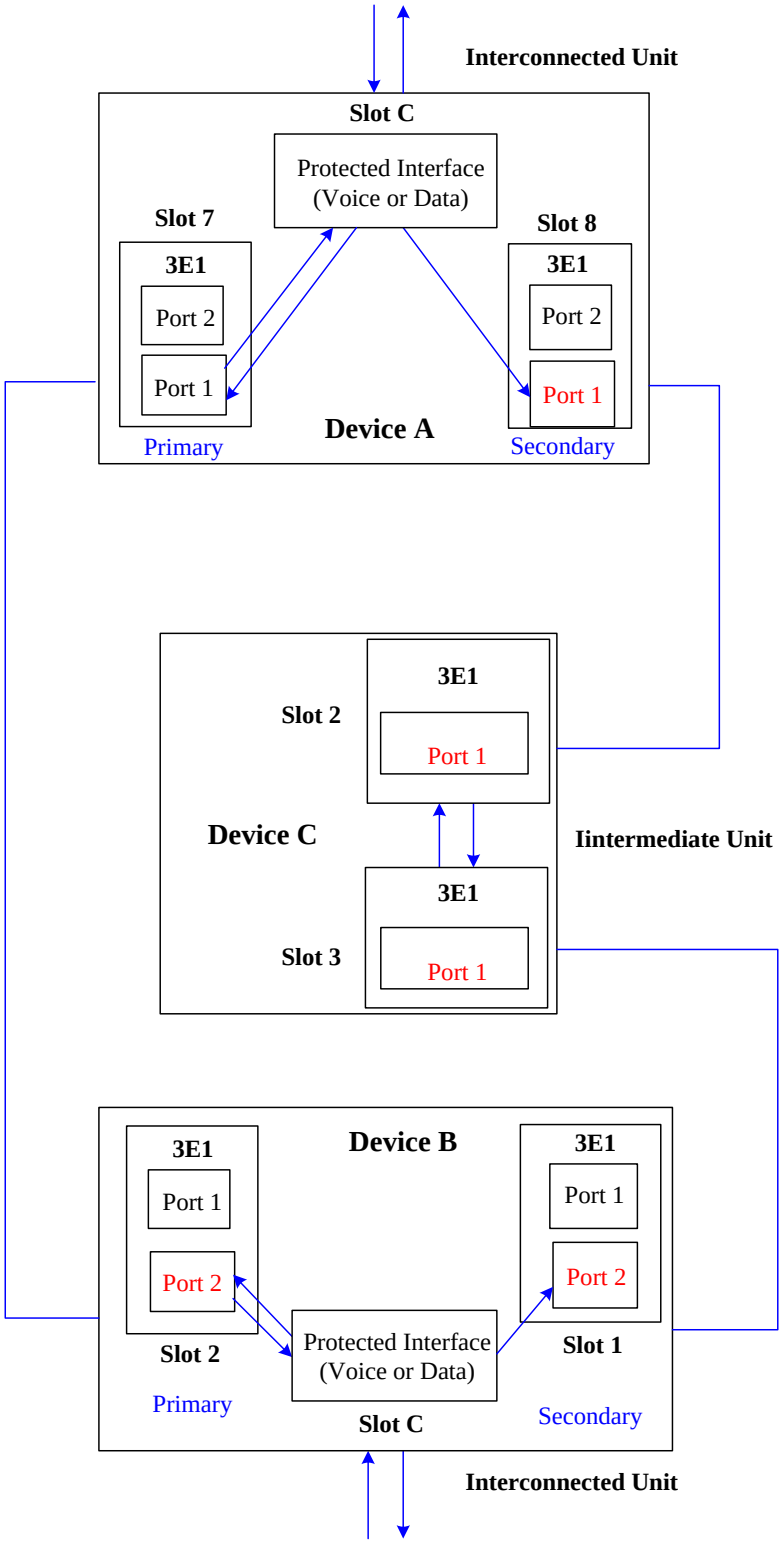

Figure 13-1 Sample Application for 3E1 DS0-SNCP Setup

13.2 Setup Procedures

1. Clock Setup

Press (K) from the main menu to access Clock Source Setup. Choose a connected 3E1 port as the master clock source and the other 3E1 port as the secondary clock source. When the master clock source is lost, the clock source will automatically switch to the secondary. If the secondary is also lost, the internal clock will take over.

The function of the Clock Holdover Mode is to use stored data to maintain clock accuracy when the master clock loses its controlling input. In our example, Device A should be Internal clock, and Device B and C should be in Clock Holdover Mode. The master clock source for device B is Slot 2, port2, and for C device is Slot 3 port 1. Below is a setup sample for Device B.

```
LOOP AM3440-A     === System Setup (CLOCK-Normal Mode) ===   14:44:20 10/15/2010

ARROW KEYS: CURSOR MOVE, TAB: ROLL OPTIONS




Master_Clk Source : SLOT_2 P2            Clock Hold-Over: ON

Second_Clk Source : SLOT_1 P2

Current Clock     : MASTER_CLK

Clk_Recover_Mode  : AUTO

Clock Status      : NORMAL

Ext. Clock Type   : E1(75ohm)

Dual External Clock Protection : Disable




<< Press ESC key to return to previous menu >>
```

2. Building Cross-Connections

First, build cross-connections for the interconnected units: Device A and Device B. For Device A, follow the command path: main menu> (S) System Setup > (K) DS0-SNCP setup. On the screen of DS0-SNCP Setup, choose “ENABLE” for DS0-SNCP, and “Create” for Action. Then, press ENTER for detailed configuration setup.

```
LOOP AM3440-A              === DS0-SNCP Setup ===        14:20:45 10/15/2010

ARROW KEYS: CURSOR MOVE, TAB: ROLL OPTIONS



DS0-SNCP : ENABLE

Using Map: MAP_1

Action   : Create




<< ESC key ignore and return, ENTER key accept change >>
```

On the screen of DS0-SNCP Creation, choose the protected interface by selecting the slot and port where the desired interface locates. Then, key in the desired T.S (timeslot) and count (the amount of the timeslot). The total timeslot number for the protected slot will show up in dot format as `[.....],` and the location of the alphabet “P” (protected) indicates the timeslot number that is occupied by the currently working DS0-SNCP ring. Same procedures should be used on setting up the primary and secondary timeslot on 3E1 cards. Note that the T.S for the primary and secondary slot should be the same. As the sample screen shows, the number in the T.S column for primary and secondary are both “1”.

On the sample screen below, we choose E1 as the protected interface, port 1 of the 3E1 card in slot 7 as primary, and port 1 of the 3E1 card in slot 8 as secondary. The total timeslot number is 31. The working (W) DS0-SNCP occupies timeslot 1 of both primary and secondary 3E1 cards. The location of “P” (protected) and “W” (working) indicates the occupied timeslot number for the DS0-SNCP circuit. To create more DS0-SNCP circuits on other timeslots, go to the TSI Map Setup (command path: Main Menu > (S) System Setup > (C) TSI Map Setup) and choose other timeslots for DS0-SNCP.

When alarms (LOS, LOF, and AIS.INS) occur in the primary slot, the working timeslot may switch from the primary to the secondary slot. If you wish the system to switch the working timeslot from secondary back to primary once the primary slot is repaired, select “revertible” for switch mode. If not, choose “Non-revertible”.

After all setup procedures are done, select “Yes” to confirm with the settings. The same setup procedure should be applied to Device B.

Note: P= Protected, W= Working, S= Standby

When the protected interface is a data card:

Below is a sample screen of DS0-SNCP setup with a protected data interface: E1 card. A DS0-SNCP circuit is created on timeslot 1.

```
LOOP AM3440-A             === DS0-SNCP Creation ===        14:38:39 10/15/2010

ARROW KEYS: CURSOR MOVE, TAB: ROLL OPTIONS


Protection Group Creation, Using map 1                     Total DS0-SNCP: 1

==============================================================================

Protected Slot: D   (E1     )          [.P.............................]

          Port:      NON-CAS

          T.S.:01

         Count:01


Primary   Slot: 7   (3E1    )          [.W.............................]

          Port:P1    NON-CAS             Protection Delay: 00

          T.S.:01                          Upstream Send AIS: On


Secondary Slot: 8   (3E1    )          [.S.............................]

          Port:P1    NON-CAS             Protection Delay: 00

          T.S.:01                          Upstream Send AIS: On


Switch Mode   :Non-revertible

Data/Voice    :Data

Confirm       :Yes



<< ESC key ignore and return, ENTER key accept change >>
```

If you create another DS0-SNCP circuit on timeslot 10 and press Yes to confirm, the screen will show as below:

```
LOOP AM3440-A             === DS0-SNCP Creation ===        14:38:39 10/15/2010

ARROW KEYS: CURSOR MOVE, TAB: ROLL OPTIONS


Protection Group Creation, Using map 1                     Total DS0-SNCP: 2

==============================================================================

Protected Slot: C   (E1     )          [.P.............................]

          Port:      NON-CAS

          T.S.:01

         Count:01


Primary   Slot: 7   (3E1    )          [.W.......W......................]

          Port:P1    NON-CAS             Protection Delay: 00

          T.S.:10                       Upstream Send AIS: On


Secondary Slot: 8   (3E1    )          [.S........S.....................]

          Port:P1    NON-CAS             Protection Delay: 00

          T.S.:10                       Upstream Send AIS: On


Switch Mode   :Non-revertible

Data/Voice    :Data

Confirm       :Yes


<< ESC key ignore and return, ENTER key accept change >>
```

When the protected interface is a voice card:

Below is a sample screen of DS0-SNCP setup with a protected voice interface: FXS card. A DS0-SNCP circuit is created on timeslot 1. Note that for voice interface, the timeslot number starts from timeslot 01, not timeslot 00.

```
LOOP AM3440-A             === DS0-SNCP Creation ===        10:36:02 11/26/2010

ARROW KEYS: CURSOR MOVE, TAB: ROLL OPTIONS


Protection Group Creation, Using map 1                     Total DS0-SNCP: 1

================================================================================

Protected Slot: 9   ( FXS    )          [P.............................]

            Port:P1

            T.S.:01

            Count:01


Primary   Slot: 7   ( 3E1    )           [.W............................]

            Port:P1     CAS               Protection Delay: 00

            T.S.:01                       Upstream Send AIS: On


Secondary Slot: 8   ( 3E1    )          [.S............................]

            Port:P1     CAS               Protection Delay: 00

            T.S.:01                       Upstream Send AIS: On


Switch Mode   :Non-revertible

Data/Voice    :Voice

Confirm       :Yes



<< ESC key ignore and return, ENTER key accept change >>
```

If you create another DS0-SNCP circuit on timeslot 02 and press Yes to confirm, the screen will show as below:

```
LOOP AM3440-A             === DS0-SNCP Creation ===        10:36:02 11/26/2010

ARROW KEYS: CURSOR MOVE, TAB: ROLL OPTIONS


Protection Group Creation, Using map 1                     Total DS0-SNCP: 2

==============================================================================

Protected Slot: 9   ( FXS    )          [PP.............................]

          Port:P2

          T.S.:02

         Count:01


Primary   Slot: 7   ( 3E1    )          [.WW............................]

          Port:P1     CAS                Protection Delay: 00

          T.S.:02                        Upstream Send AIS: On


Secondary Slot: 8   ( 3E1    )          [.SS............................]

          Port:P1     CAS                Protection Delay: 00

          T.S.:02                        Upstream Send AIS: On


Switch Mode   :Non-revertible

Data/Voice    :Voice

Confirm       :Yes



<< Press ESC key to return to previous menu >>
```

Second, build a bypass connection for the intermediate unit: Device C. Follow the command: Main Menu > (S) System Setup > (C) TSI Map Setup. Access the TSI Map setup, select the desired slot and port number for the mapping target. Next, select the starting timeslot number (T.S) and the timeslot amount (T.S #), and data or voice mode (d/v) for the target. Also select the desired slot, port and starting timeslot number (T.S) for the mapping source. After setup, select “Yes” for confirmation.

```
LOOP AM3440-A             === System Setup (MAP) ===       18:33:28 11/18/2010

ARROW KEYS: CURSOR MOVE, TAB: ROLL OPTIONS

MAP NO: MAP_1

            Target     3E1     NON-CAS         Source     3E1     NON-CAS

Target      PO/TS D SL/PO TS PO/TS D SL/PO TS  PO/TS D SL/PO TS PO/TS D SL/PO TS

Slot  :  2  ===== ========== ===== ==========  ===== ========== ===== ==========

Port  : P1   1  1 d  3  1  1    17 d            1  1 d  2  1  1    17 d

T.S.  : 01      2 d             18 d               2 d              18 d

                3 d             19 d               3 d              19 d

                4 d             20 d               4 d              20 d

T.S.# : 01      5 d             21 d               5 d              21 d

Clear : No      6 d             22 d               6 d              22 d

d/v   : d       7 d             23 d               7 d              23 d

                8 d             24 d               8 d              24 d

                9 d             25 d               9 d              25 d

Source          10 d             26 d              10 d              26 d

Slot  :  3      11 d             27 d              11 d              27 d

Port  : P1      12 d             28 d              12 d              28 d

T.S.  : 01      13 d             29 d              13 d              29 d

                14 d             30 d              14 d              30 d

Confirm?Yes     15 d             31 d              15 d              31 d
```

To create another DS0-SNCP circuit on timeslot 10, go over the same procedure again and set T.S. to “10”. Then, select “Yes” to confirm.

```
LOOP AM3440-A             === System Setup (MAP) ===       18:33:28 11/18/2010

ARROW KEYS: CURSOR MOVE, TAB: ROLL OPTIONS

MAP NO: MAP_1

            Target     3E1     NON-CAS         Source     3E1     NON-CAS

Target      PO/TS D SL/PO TS PO/TS D SL/PO TS  PO/TS D SL/PO TS PO/TS D SL/PO TS

Slot  :  2  ===== ========== ===== ==========  ===== ========== ===== ==========

Port  : P1   1  1 d  3  1  1    17 d            1  1 d  2  1  1    17 d

T.S.  : 10      2 d             18 d               2 d              18 d

                3 d             19 d               3 d              19 d

                4 d             20 d               4 d              20 d

T.S.# : 01      5 d             21 d               5 d              21 d

Clear : No      6 d             22 d               6 d              22 d

d/v   : d       7 d             23 d               7 d              23 d

                8 d             24 d               8 d              24 d

                9 d             25 d               9 d              25 d

Source          10 d  3 1 10   26 d              10 d   2 1 10    26 d

Slot  :  3      11 d             27 d              11 d              27 d

Port  : P1      12 d             28 d              12 d              28 d

T.S.  : 10      13 d             29 d              13 d              29 d

                14 d             30 d              14 d              30 d

Confirm?Yes     15 d             31 d              15 d              31 d
```

Then, go back to the previous layer and select “(D) Select a New TSI Map” for bypass activation.

```
LOOP AM3440-A           === System Setup (New map) ===     15:01:22 11/15/2010

ARROW KEYS: CURSOR MOVE, TAB: ROLL OPTIONS


                           Last activated TSI Map: MAP_1


                           Change to TSI Map     : MAP_1




                         [TSI Map]   switch   start hr/min

                            Map1     DISABLE   00:00

                            Map2     DISABLE   00:00

                            Map3     DISABLE   00:00

                            Map4     DISABLE   00:00


<< Press ESC to return to previous menu >>
```

Use MAP1 only for DS0-ANCP application. On the screen of “Select a New TSI map”, select Map 1 for TSI map.

Note: For DS0-SNCP setup, the map number should always be Map 1(default configuration).

3. Diagnosis

To diagnose the DS0-SNCP rings, access DS0-SNCP Setup through the command path: main menu > (S) System Setup > (K) DS0 SNCP Setup. Select “Status” for Action and press ENTER.

```
LOOP AM3440-A              === DS0-SNCP Setup ===        16:15:14 10/15/2010

ARROW KEYS: CURSOR MOVE, TAB: ROLL OPTIONS


DS0-SNCP : ENABLE

Using Map: MAP_1

Action   : Status









<< ESC key ignore and return, ENTER key accept change >>
```

The following screen will show up. The index shows the currently built DS0-SNCP circuit and their detailed information. You can use the commands listed at the bottom of the screen to make diagnosis on each DS0-SNCP circuit.

```
LOOP AM3440-A           === DS0-SNCP Information ===      16:19:38 10/15/2010


DS0-SNCP : ENABLE                       Total DS0-SNCP: 2


Index Protected        Primary          Secondary       d/v  Mode

      Slot Port TS     Slot Port TS     Slot Port TS

================================================================================

   1   D        01    W 7    1   01      8    1   01     D   Non-revertible

   2   C        01    W 7    1   10      8    1   10     D   Non-revertible





ESC:return, SPACE:next page, D:delete, F:force switch, M:change mode

L:lock on working, P:lock on primary, S:lock on secondary, U:unlock
```

- **ESC:** Return to the previous page
- **SPACE:** Go to the next page for more DS0-SNCP information
- **Delete:** Delete a DS0-SNCP ring from the index.

Press D on the screen of DS0-SNCP information. A prompt message will ask you to choose the SNCP circuit you would like to delete. If you want to delete one circuit, key in the circuit's index number in both "from" and "to" columns as the example below. Then, press Enter and select Yes for "confirm to do".

```
LOOP AM3440-A            === DS0-SNCP Information ===      16:19:38 10/15/2010


DS0-SNCP : ENABLE                        Total DS0-SNCP: 2

Delete Index From:1    To 1__      Confirm To Do? Yes

Index Protected        Primary          Secondary       d/v  Mode

      Slot Port TS     Slot Port TS     Slot Port TS

================================================================================

   1   D        01    W 7    1   01      8    1   01     D   Non-revertible

   2   C        01    W 7    1   10      8    1   10     D   Non-revertible
```

The circuit you choose to delete will be cleared from the index:

```
Index Protected        Primary          Secondary       d/v  Mode

      Slot Port TS     Slot Port TS     Slot Port TS

================================================================================

    1  C        01    W 7    1   10      8    1   10     D   Non-revertible
```

To delete the circuits with a continuous order of index number altogether, key-in the first index number in the “from” column, and the last index number in the “to” column. In the example below, we key-in “Delete index from 1 to 2, which means to delete index 1 and 2 altogether. Then, press Enter and select “Yes” for “confirm to do.”

```
Delete Index From:1    To 2__     Confirm To Do? Yes
```

Both SNCP circuits for index 1 and 2 will be cleared.

```
LOOP AM3440-A            === DS0-SNCP Information ===      16:19:38 10/15/2010


DS0-SNCP : ENABLE                        Total DS0-SNCP: 2

Delete Index From:1    To 1__     Confirm To Do? Yes

Index Protected        Primary          Secondary       d/v  Mode

      Slot Port TS     Slot Port TS     Slot Port TS

==============================================================================









ESC:return, SPACE:next page, D:delete, F:force switch, M:change mode

L:lock on working, P:lock on primary, S:lock on secondary, U:unlock
```

Note: The by-pass XC in intermediate unit should be deleted.

- **Force Switch:**

Switch the working timeslot between the primary (working) and the secondary (stand-by).

Press F on the screen of DS0-SNCP information. A prompt message will ask you which SNCP circuit you would like to switch the working timeslot. Key-in the desired circuit's index number. Then, press ENTER and choose Yes for "Confirm to do".

```
LOOP AM3440-A            === DS0-SNCP Information ===      16:19:38 10/15/2010


DS0-SNCP : ENABLE                        Total DS0-SNCP: 2

Force Switch (to Other) Index From:1     To_1     Confirm To Do? Yes

Index Protected        Primary          Secondary       d/v  Mode

      Slot Port TS     Slot Port TS     Slot Port TS

==============================================================================

   1   D        01     W 7    1   01      8    1   01     D   Non-revertible

   2   C        01     W 7    1   10      8    1   10     D   Non-revertible
```

The working timeslot will then switch from the original one to the other. In the sample screen, the original working timeslot for index 1 circuit is "Primary". Once it has been force switched, the working timeslot will switch to "Secondary". The working timeslot is indicated by the "W" mark beside the slot number.

```
LOOP AM3440-A            === DS0-SNCP Information ===      16:19:38 10/15/2010


DS0-SNCP : ENABLE                          Total DS0-SNCP: 2

Force Switch (to Other) Index From:1     To_1     Confirm To Do? Yes

Index Protected        Primary          Secondary       d/v  Mode

      Slot Port TS     Slot Port TS     Slot Port TS

==============================================================================

   1   D        01      7    1   01      W8    1   01     D   Non-revertible

   2   C        01     W 7    1   10       8    1   10     D   Non-revertible
```

To force switch the circuits with a continuous order of index number altogether, key-in the first index number in the “from” column, and the last index number in the “to” column.

- **Change Mode:** Change the DS0-SNCP mode between revertible and non-revertible

Press M on the screen of DS0-SNCP information. A prompt message will ask you which SNCP circuit you would like to switch the mode. Key in the circuit’s index number and press Enter. Then, select “Yes” for “Confirm to do”.

```
LOOP AM3440-A            === DS0-SNCP Information ===      16:19:38 10/15/2010


DS0-SNCP : ENABLE                          Total DS0-SNCP: 2

Force Switch (to Other) Index From:1    To 1     Confirm To Do? Yes

Index Protected        Primary          Secondary       d/v  Mode

      Slot Port TS     Slot Port TS     Slot Port TS

==============================================================================

   1   D         01    W 7    1   01        8    1   01     D     Non-revertible

   2   C         01    W 7    1   10        8    1   10     D     Non-revertible
```

The circuit you choose will switch from the original mode to the other (Non-revertible to revertible, or vise versa). In the sample screen, the original mode for index 1 circuit is “Non-revertible”. After we activate “Change Mode” for the circuit of index 1, its mode will change to Revertible.

```
Index Protected        Primary          Secondary       d/v  Mode

      Slot Port TS     Slot Port TS     Slot Port TS

==============================================================================

   1   D         01    W 7    1   01        8    1   01     D     Revertible

   2   C         01    W 7    1   10        8    1   10     D     Non-revertible
```

To change the mode of a continuous order of index number altogether, key-in the first index number in the “from” column, and the last index number in the “to” column.

- **Lock on Working:** Lock the data path on the working slot and port

Press L on the screen of DS0-SNCP information. A prompt message will ask you to select the SNCP circuit which you would like to lock on its currently working timeslot. Key in the circuit’s index number and press Enter. Then, select “Yes” for “Confirm to do”.

The working timeslot will then be locked and will not switch automatically. The locked circuit will also change its mode to “Lock”.

```
LOOP AM3440-A            === DS0-SNCP Information ===      16:19:38 10/15/2010


DS0-SNCP : ENABLE                          Total DS0-SNCP: 2

Force Lock on working - Index From:1    To 1     Confirm To Do? Yes

Index Protected        Primary          Secondary       d/v  Mode
```

```
      Slot Port TS     Slot Port TS     Slot Port TS

================================================================================

   1   D        01    W 7    1   01      8    1   01     D   Lock

   2   C        01    W 7    1   10      8    1   10     D   Non-revertible
```

To activate “Lock on Working” on the circuits with a continuous order of index number altogether, key-in the first index number in the “from” column, and the last index number in the “to” column.

- **Lock on Primary:** Lock the data path on the primary timeslot

Press P from the screen of DS0-SNCP information. A prompt message will ask you to select the SNCP circuit which you would like to lock the primary timeslot as the working timeslot. Key in the circuit’s index number and press Enter. Then, select “Yes” for “Confirm to do”.

```
LOOP AM3440-A            === DS0-SNCP Information ===      16:19:38 10/15/2010


DS0-SNCP : ENABLE                        Total DS0-SNCP: 2

Force Lock on working - Index From:1     To 1     Confirm To Do? Yes

Index Protected        Primary           Secondary       d/v  Mode

      Slot Port TS     Slot Port TS     Slot Port TS

================================================================================

   1   D        01    W 7    1   01      8    1   01     D   Non-revertible

   2   C        01    W 7    1   10      8    1   10     D   Non-revertible
```

The working timeslot will then be locked in the primary slot and port, and will not switch automatically. The locked circuit will also change its mode to “Lock”.

```
Index Protected        Primary          Secondary       d/v  Mode

      Slot Port TS     Slot Port TS     Slot Port TS

================================================================================

   1   D        01     W 7    1   01      8    1   01     D   Lock

   2   C        01     W 7    1   10      8    1   10     D   Non-revertible
```

To activate “Lock on Primary” on the circuits with a continuous order of index number altogether, key-in the first index number in the “from” column, and the last index number in the “to” column.

- **Lock on Secondary:** Lock the data path on the secondary timeslot

Press S from the screen of DS0-SNCP information. A prompt message will ask you to select the SNCP circuit which you would like to lock the secondary timeslot as the working timeslot. Key in the circuit’s index number and press Enter. Then, select “Yes” for “Confirm to do”.

```
LOOP AM3440-A            === DS0-SNCP Information ===      16:19:38 10/15/2010


DS0-SNCP : ENABLE                       Total DS0-SNCP: 2

Force Lock on working - Index From:1     To 1      Confirm To Do? Yes

Index Protected        Primary          Secondary       d/v  Mode

      Slot Port TS     Slot Port TS     Slot Port TS

================================================================================

   1   D        01     W   7    1   01      8    1   01     D   Non-revertible

   2   C        01     W   7    1   10      8    1   10     D   Non-revertible
```

The working timeslot will then be locked on the secondary slot and port, and will not switch automatically. The locked circuit will also change its mode to “lock”.

```
Index Protected        Primary          Secondary       d/v  Mode

      Slot Port TS     Slot Port TS     Slot Port TS

==============================================================================

   1   D        01       7    1   01      W 8    1   01     D   Lock

   2   C        01    W  7    1   10        8    1   10     D   Non-revertible
```

To activate “Lock on Primary” on the circuits with a continuous order of index number altogether, key-in the first index number in the “from” column, and the last index number in the “to” column.

- **Unlock:** Unlock the locked timeslot

4. Bit Error Rate Test

BERT (Bit Error Rate Test) is used to diagnose channel connection with predetermined stress patterns. You can use BERT at one end with a loopback at the remote end, or in pairs with one at either end of a transmission link. The loopback test can be set by using hardware loopback or software loopback (command path: 3E1 Unit Menu> (L) Unit Loopback Setup).

The example below shows the setup procedure of BERT at Device A with a loopback at Device B.

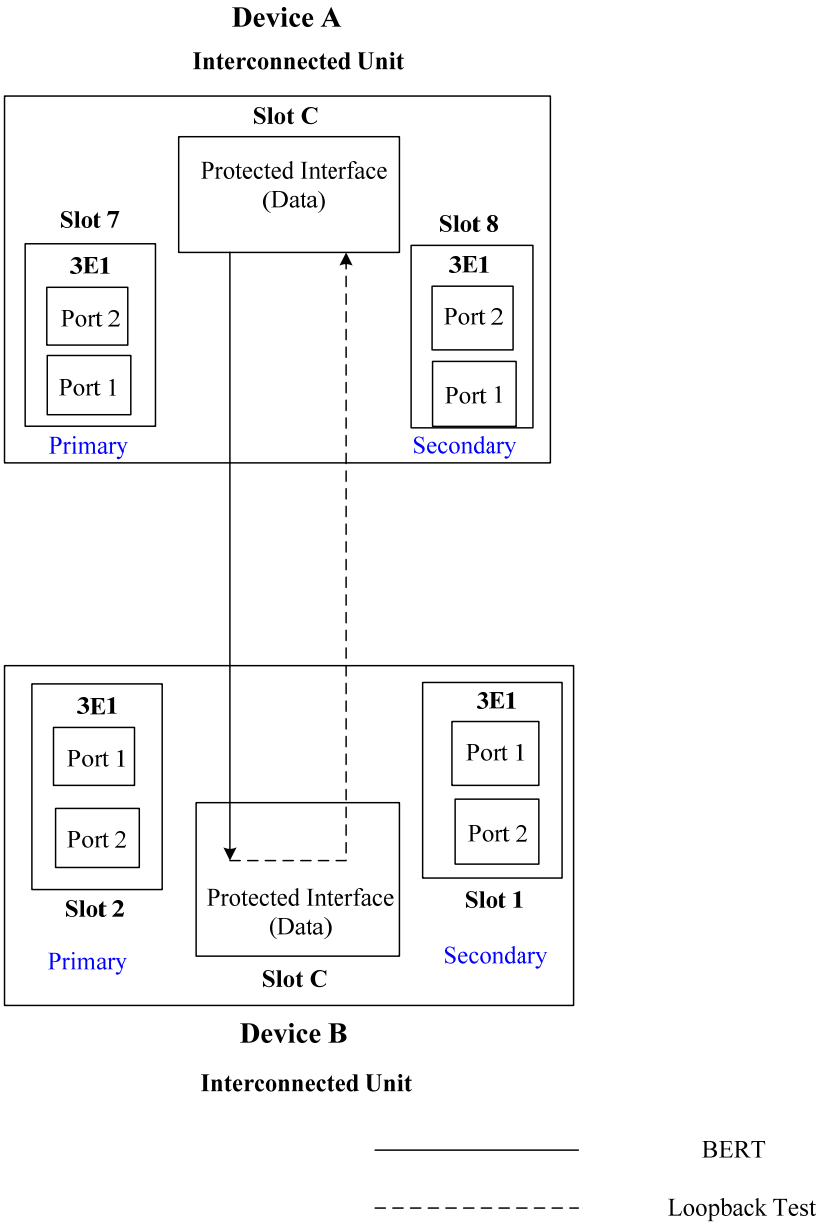

Figure 13-2 Application for BERT and Loopback Diagnosis

First, lock the data path between the E1 card (protected interface) of Device A to the E1 card (protected interface) of Device B. On both devices, access DS0-SNCP setup and use the command “Lock on Primary” to lock the data path. (Command Path: Controller Menu> (K) DS0-SNCP Setup> Action: Status).

On Device A, lock the primary data path with the protected E1 card at slot C:

```
LOOP AM3440-A            === DS0-SNCP Information ===      14:32:28 11/19/2010

Please Input decimal number (1~2), BACKSPACE to edit

DS0-SNCP : ENABLE                        Total DS0-SNCP: 2

Force Lock on primary - Index From:1     To 1__    Confirm To Do? Yes


Index Protected        Primary          Secondary       d/v  Mode

      Slot Port TS     Slot Port TS     Slot Port TS

=====================================================================

   1   C        01    W 7    1   10      8    1   10     D   Lock

   2   D        01    W 7    1   01      8    1   01     D   Non-revertible


ESC:return, SPACE:next page, D:delete, F:force switch, M:change mode

<< Press ESC key to return to previous menu >>
```

On Device B, lock the primary data path with the protected E1 card at slot C:

```
LOOP AM3440-A            === DS0-SNCP Information ===      14:51:28 11/19/2010

ARROW KEYS: CURSOR MOVE, TAB: ROLL OPTIONS

DS0-SNCP : ENABLE                        Total DS0-SNCP: 1

Force Lock on primary - Index From:1     To 1     Confirm To Do? Yes


Index Protected        Primary          Secondary       d/v  Mode

      Slot Port TS     Slot Port TS     Slot Port TS

=====================================================================

   1   C          01    W 2    2    01     1      2    01   D    Lock



ESC:return, SPACE:next page, D:delete, F:force switch, M:change mode

<< Press ESC key to return to previous menu >>
```

Second, access the 3E1 port menu of Device B. Choose (L) Unit Loopback Setup from the 3E1 port menu. Select “LOCAL” (local loopback) for Near-end Loopback and press ENTER.

```
SLOT 2 3-E1 PORT 1        === Port Loopback Test ===       15:45:49 11/19/2010

ARROW KEYS : CURSOR MOVE , ENTER KEY : ITEM SELECT


- NEAR-END LOOPBACK   :  OFF  *LOCAL  PLB LLB
```

```
- SEND LOOPBACK ACTIVATE CODE TO FAR-END:

        *PAYLOAD  LINE

- SEND LOOPBACK DEACTIVATE CODE TO FAR-END:

        *PAYLOAD  LINE

- SEND TEST PATTERN:

        *OFF  PRBS-FULL


- STATUS:


<< Press ESC key to return to previous menu >>
```

Third, go back to Device A and activate Bit Error Test. Follow the command path: Main Menu> (T) Bit Error Test to access BERT test. The function of each configuration is listed below.

```
LOOP AM3440-A                 === BERT Test ===           15:41:19 11/08/2010

ARROW KEYS: CURSOR MOVE, TAB: ROLL OPTIONS


Test Slot    :  C   ( FE1  )

Test Port    :  01

Pattern Type : 2exp20-1

Split Mode   : Send AIS

Test Channel : Mapped

Test Map     : i1iiiiiiiiiiiiiiiiiiiiiiiiiiiiii

Test Direct  : To-MAP

User Pattern : 01011101

Period(sec)  : 0000000

Test Enable  : DISABLE




<< Press ESC key to return to previous menu >>
```

Test Slot/ Test Port: Select the protected slot and port for BERT diagnosis. Our example is to use the E1 card of Device A as the interface that sends outgoing BERT pattern. Therefore, the test slot should be the location of the E1 card: slot C. Then, choose port one as the test port for the E1 card.

Pattern Type: The transmitted bit sequence that determines the BERT pattern. The options include: 2exp9-1, 2exp11-1, 2exp15-1 and user def (user define). When set as user def, you'll have to set the User Pattern according to your need.

Split Mode: Choose to send BERT with or without AIS (Alarm Indication Signal).

Test Channel: Choose the timeslot that you want to use for BERT diagnosis. “Mapped” means all the mapped timeslots. “Full” means all of the timeslots. “Select” means to select the timeslot in the following “Test Map” column.

Test Map: available for setup only when the user chooses “Select” for Test Channel. Move the cursor to select the test channel. The screen will show the channel number you select.

```
Test Map     : iiiiiiiiiiiiiiiiiiiiiiiiiiiiiiii CH :01
```

Test Direction: BERT direction that determines the testing path. Choose “To Line” to make BERT goes straight from the testing timeslot to the selected interface. Choose “To Mapped” to make BERT goes from the testing timeslot to the cross connect, than to the mapped interface.

Period: Period is the testing time duration for the BERT diagnosis. You can set up the testing time limit (sec.) by yourself. The default rate is 000000 and will make the BERT diagnosis goes on forever.

Test Enable: After you have set all the parameters mentioned above, choose “Enable” to activate the BERT test.

After you enable the BERT test, the system will show the current testing status on the screen as below: You can also inject an error to the BERT pattern using the right arrow key. If the sent out pattern is the same with the received pattern, the channel being diagnosed is in normal condition.

```
Pattern: 2exp20-1   SYNC              Elapsed Second: 77

Bit Error     : 0                     BER  : 0.0

Error Seconds : 0                     ESR  : 0.0

SES           :  0                    SESR : 0.0         Pattern: 2exp20-1

  SYNC


<< ESC KEY : EXIT, LEFT ARROW : RESET ERROR, RIGHT ARROW :INJECT AN ERROR >>
```

14 Appendix G: AM3440-A Power Consumption

There are four types of power modules: -48 Vdc (100W), -48 Vdc (150W), -24 Vdc (150W) and -125 Vdc (100W). The tables below list the power consumption of the controller card and other plug-in cards. This information is used to calculate the total power consumption and to determine if a fan tray is required or not.

Table 14-1 Power Consumption of AM3440-A Plug-in cards for -48 Vdc (100W), -48 Vdc (150W) and -24 Vdc (150W) Power Modules

Slot	Plug-in cards and Fan Tray	-48 Vdc (100W) Power Module and -48 Vdc (150W) Power Module	-24 Vdc (150W) Power Module	System* Power Consumption
		Power Consumption (Watt)	Power Consumption (Watt)	Power Consumption (Watt)
CTRL	Single controller	4	4	4
Mini Slot	1-channel E1 (Single E1 interface)	2	2	2
	1-channel T1 (Single T1 interface)	2	2	2
	Mini Quad E1 (Four E1 interfaces)	2	2	2
	1-channel E1 ATM/Frame Relay	3	3	3
	1-channel T1 ATM/Frame Relay	3	3	3
	2-LAN port/32 WAN port Router	2	2	2
	2-LAN port/64 WAN port Router-A	3	3	3
	Fiber optical interface	2	2	2
	3-channel Terminal Server	2	2	2
	1-channel EIA530	2	2	2
	1-channel RS232	1	1	1
	1-channel V.35	1	1	1
	1-channel X.21	2	2	2
Single Slot	4-channel E1	3	3	3
	4-channel T1	3	3	3
	6-channel U interface	2	2	2
	10-channel U interface	3	3	3
	2-channel G.SHDSL (2 pairs) w/o line power	5	5	5
	4-channel G.SHDSL (1 pair) w/o line power	5	5	5
	8-channel G.703 card at 64 Kbps data rate	2	2	2
	8-channel Dry Contact I/O	3	3	3
	8-channel 2W/4W E&M	4	4	7
	12-channel FXS	3	N/A	19
	12-channel FXO	4	4	4
	12-channel Magneto	4	N/A	8
	1-channel low speed optical (C37.94)	1	1	1
	4-channel low speed optical (C37.94)	2	2	2
	8-channel RS232 with X.50 subrate	1	1	1
	8-channel Data Bridge Card	1	1	1
	8-LAN-port/ 64-WAN-port Router-B	6	6	6
	3-channel E1	3	3	3
	Conference Card	4	4	4
	TDMoE	5.7	5.7	5.7
	OCUDP	4	N/A	12
	1FOM-A	2	2	2
Dual Slot	6-channel X.21/V.11	4	4	4
	6-channel V.35	4	4	4
	6-channel V.36	6	6	6
	6-channel EIA530/RS449 card	6	6	6
	24-channel FXS	6	N/A	38

Chapter 14 Appendix G: AM3440-A Power Consumption

Slot	Plug-in cards and Fan Tray	-48 Vdc (100W) Power Module and -48 Vdc (150W) Power Module	-24 Vdc (150W) Power Module	System* Power Consumption
		Power Consumption (Watt)	Power Consumption (Watt)	Power Consumption (Watt)
	24-channel FXO	8	8	8
	2-channel G. SHDSL (2 pairs) with line power (Fan tray required)	5	N/A	25
	4-channel G. SHDSL (1 pair) with line power (Fan tray required)	5	N/A	33
	Fan tray	0	N/A	12

Note:
CTRL = controller, N/A = Not Applicable, W = Watt and w/o = without
*To calculate actual power consumption including power used to drive telephone and remote unit through line power.

Condition 1:
If total power consumption of device and plug-in cards is less than 60 Watts, an additional fan try is not required.

Number of Plug-in cards Used	Power Consumption (Watt)
2 controllers @4	8
2 1-channel E1 cards @2	4
5 12-channel FXS cards @3	15
Total	27 Watts

Condition 2:
If total power consumption of device and plug-in cards is more than 60 Watts, an additional fan try is required.

Number of Plug-in cards Used	Power Consumption (Watt)
2 controllers @4	8
4 1-channel E1 cards @2	8
2 4-channel E1 cards @3	6
2 Router-B cards @6	12
8 4-channel G.SHDSL w/o line power@5	40
Total	74 Watts

Condition 3 (for G.SHDSL with line power plug-in card only):
The fan try is required for all G. SHDSL cards with line power cards due to higher heat density dissipation in the slot.

Chapter 14 Appendix G: AM3440-A Power Consumption

Table 14-2 Power Consumption of AM3440-A Plug-in cards for -125 Vdc (100W) Power Module

Slot	Plug-in cards and Fan Tray	-125 Vdc (100W) Power Module Power Consumption (Watt)	Note
CTRL	Single controller	4	
Mini Slot	1-channel E1 (Single E1 interface)	2	
	1-channel T1 (Single T1 interface)	2	
	Mini Quad E1 (Four E1 interfaces)	2	
	1-channel E1 ATM/Frame Relay	3	
	1-channel T1 ATM/Frame Relay	3	
	2-LAN port/32 WAN port Router	2	
	2-LAN port/64 WAN port Router-A	3	
	Fiber optical interface	2	
	3-channel Terminal Server	2	
	1-channel EIA530	2	
	1-channel RS232	1	
	1-channel V.35	1	
	1-channel X.21	2	
Single Slot	4-channel E1	3	
	4-channel T1	3	
	6-channel U interface	2	
	10-channel U interface	3	
	8-channel OCU-DP	12	
	2-channel G.SHDSL (2 pairs) w/o line power	5	
	4-channel G.SHDSL (1 pair) w/o line power	5	
	8-channel G.703 card at 64 Kbps data rate	2	
	8-channel Dry Contact I/O	3	
	8-channel 2W/4W E&M	7	
	12-channel FXS	19	**12 channel OFF-Hook : 19 W** **6 channel OFF-Hook : 12 W** **4 channel OFF-Hook : 10 W**
	12-channel FXO	4	
	12-channel Magneto	8	
	1-channel low speed optical (C37.94)	1	
	4-channel low speed optical (C37.94)	2	
	8-channel RS232 with X.50 subrate	1	
	8-LAN-port/ 64-WAN-port Router-B	6	
	3-channel E1	3	
	Conference Card	4	
	TDMoE	5.7	
	Data Bridge Card	1	
Dual Slot	6-channel X.21/V.11	4	
	6-channel V.35	4	
	6-channel V.36	6	
	6-channel EIA530/RS449 card	6	
	24-channel FXS	38	
	24-channel FXO	8	
	2-channel G. SHDSL (2 pairs) with line power (Fan tray required)	25	Fan tray required
	4-channel G. SHDSL (1 pair) with line power (Fan tray required)	33	Fan tray required
	Fan tray	12	0

Note: CTRL = controller**,** N/A = Not Applicable, W = Watt and w/o = without

Chapter 14 Appendix G: AM3440-A Power Consumption

Power limitations determine how many plug-in cards of a particular type can be plugged into slots 1 to 12 of a chassis. Please refer to the table below.

Plug-in card Capacity for Slots 1 to 12	
Plug-in card Type	**Maximum. Number of Plug-in cards in Slots 1 to 12**
12-channel FXS	4
8-channel OCU-DP	6
12-channel Magneto	9
8-channel 2W/4W E&M	11
4-channel G. SHDSL (1 pair) with line power	2
2-channel G. SHDSL (2 pairs) with line power	3
24-channel FXS	2
Other plug-in cards	No limitations

Note: No such limitations exist for plug-in cards plugged into mini slots A to D.

Condition 1:
If total power consumption of device and plug-in cards is less than 60 Watts, an additional fan try is not required.

Number of Plug-in cards Used	Power Consumption (Watt)
2 controllers @4	8
2 1-channel E1 cards @2	4
4 12-channel FXO cards @4	16
Total	28 Watts

Condition 2:
If total power consumption of device and plug-in cards is more than 60 Watts, an additional fan try is required.

Number of Plug-in cards Used	Power Consumption (Watt)
2 controllers @4	8
4 1-channel E1 cards @2	8
2 4-channel E1 cards @3	6
2 Router-B cards @6	12
5 4-channel G.SHDSL w/o line power @5	25
1 12-channel FXS card @19	19
Total	78 Watts

Condition 3 (for G.SHDSL with line power plug-in card only):
The fan try is required for all G. SHDSL cards with line power plug-in cards due to higher heat density dissipation in the slot.